Application No.: OH0054399
OEPA Permit No.: 4PK00001*ND
Public Notice No.: 195230

National Pollutant Discharge Elimination System (NPDES) Permit Program

P U B L I C N O T I C E

NPDES Permit Modification to Discharge to State Waters

Ohio Environmental Protection Agency
Lazarus Government Center
50 West Town Street.
P. O. Box 1049
Columbus, Ohio 43216-1049
(614) 644-2001

Public Notice No.: 195230

Date of Issuance of Proposed Modification: January 29, 2024
Date of Public Notice: February 5, 2024
Effective Date of Modification: PROPOSED

Name and Address of Applicant: Delaware County Commissioners, 10333 Olentangy River Road, Delaware, OH 43065

Name and Address of Facility where Discharge Occurs: Olentangy Environmental Control Center, 10333 Olentangy River Road, Delaware, OH 43065, Delaware County

Location of Discharge: 001 - (Lat: 40N 01' 00"; Long: 83W 02' 15")

Receiving Water: Olentangy River

Purpose of this Modification: Updated Parameters, Revised Header Statements

The following statements apply to the modification. On the basis of preliminary staff review and application of standards and regulations, the Director of the Ohio Environmental Protection Agency has issued a proposed modification for the aforementioned discharge subject to certain effluent conditions and special conditions. The proposed modification is tentative but shall become final on the effective date unless: 1) an adjudication hearing is requested, 2) the Director withdraws and revises the proposed modification after consideration of the record of a public meeting, written comments, or statements, or 3) upon disapproval by the administrator of the U.S. Environmental Protection Agency.

Within thirty days of publication of this notice, any person may submit written comments, a statement as to why the proposed modification should be changed, a request for a public meeting on the proposed modification, and/or a request for notice of further actions concerning the modification. All communications timely received will be considered in the final formulation of the modification. If significant public interest is shown, a public meeting will be held prior to finalization of the modification.

New or Revised Water Quality Based Effluent Limitations: This proposed modification may contain new or revised water quality based effluent limitation(s) (WQBELs). In accordance with Ohio Revised Code Section 6111.03(J)(3), the Director establishes WQBELs after considering, to the extent consistent with the Federal Water Pollution Control Act, evidence relating to the technical feasibility and economic reasonableness of removing the polluting properties from those wastes and to evidence relating to conditions calculated to result from that action and their relation to benefits to the people of the state and to accomplishment of the purposes of this chapter. This determination was made based on all pertinent data and information available to the Director at the time the modification was drafted.

This public notice hereby allows the permittee to provide to the Director for consideration during this public comment period, additional site-specific pertinent and factual information with respect to the technical feasibility and economic reasonableness for achieving compliance with any new or revised WQBEL(s). This information shall be submitted to the addresses listed below.

Should the applicant need additional time to review, obtain or develop site-specific pertinent and factual information with respect to the technical feasibility and economic reasonableness of achieving compliance with a new or revised WQBEL(s), written notification for any additional time shall be sent no later than 30 days after the date of this public notice to the Director at the addresses listed below.

Should the applicant determine that compliance with a new or revised WQBEL is technically and/or economically unattainable, the permittee may submit an application for a variance to the applicable WQBEL in accordance with the terms and conditions set forth in Ohio Administrative Code (OAC) Rule 3745-1-38 no later than 30 days after the date of this public notice to the addresses listed below.

Alternately, the applicant may propose the development of site-specific water quality standard(s) pursuant to OAC Rule 3745-1-39. The permittee shall submit written notification to the Director regarding their intent to develop site-specific water quality standards for the pollutant at issue to the addresses listed below no later than 30 days after the date of this public notice.
Within 45 days of the issuance of the proposed modification, any officer or an agency of the state or of a political subdivision, acting in his representative capacity or any person aggrieved or adversely affected by issuance of it may request an adjudication hearing by submitting a written objection in accordance with Ohio Revised Code Section 3745.07. Following the finalization of the modification by the Director, any person who was a party to an adjudication hearing may appeal to the Environmental Review Appeals Commission.

All comments or statements on the proposed modification and all requests for notice of further actions should be submitted in person or by mail to: Ohio Environmental Protection Agency, Division of Surface Water, Lazarus Government Center, Permits Processing Unit, 50 West Town Street., P. O. Box 1049, Columbus, Ohio 43216-1049. Applications, fact sheets, proposed permits including proposed effluent limitations, special conditions, comments received, and other documents are available for inspection and may be copied at a cost of 5 cents per page at the Ohio Environmental Protection Agency at the above address any time between the hours of 8 a.m. and 4:30 p.m., Monday through Friday. Copies of public notices are available at no charge at the same address.

Individual NPDES draft permits that are in public notice are now available on DSW's web site:

https://epa.ohio.gov/divisions-and-offices/surface-water/permitting/list-of-draft-permit-public-notices

Requests for, and communications concerning, adjudication hearings and public meetings should be addressed to: Legal Records Section, Ohio Environmental Protection Agency, Lazarus Government Center, 50 West Town Street Ste 700, P. O. Box 1049, Columbus, Ohio 43266-0149, (614) 644-2115.

All communications should specify the OEPA permit number and public notice number.

Mailing lists are maintained for persons or groups who desire to receive public notice of proposed and final actions taken on applications for dischargers located in the state or in certain geographical areas. Persons or groups may have their names put on such a list by making a written request to the Permits Processing Unit. Persons or groups may also request copies of fact sheets, applications, or other documents pertaining to a specific application.

Ohio Environmental Protection Agency
Modification of National Pollutant Discharge
Elimination System (NPDES) Permit

Issue Date: January 29, 2024 Existing Permit No.: 4PK00001*MD

Effective Date: PROPOSED Application No.: OH0054399

Entity Name: Olentangy Environmental Control Center

Facility Location: 10333 Olentangy River Road, Powell, Ohio, Delaware County.

In accordance with Rule 3745-33-04 (D) of the Ohio Administrative Code (OAC), the above referenced NPDES Permit is hereby modified as follows:

Revision

1. Revised the “Issuance Date”, “Effective Dates”, “Expiration Date” to become “Modification Issuance Date”, “Modification Effective Dates”, “Modification Expiration Date” and adjusted the Modification Issuance Date and the Modification Effective Date to account for the permit modification.

2. Added Director’s Antidegradation Decision Statement to the cover sheet of the NPDES permit modification.

3. Updated Director’s name in the signature block on the cover sheet of the NPDES permit.

4. Revised the header statement on Page 2 for the Final Effluent Limitations and Monitoring Requirements table for outfall 4PK00001001 to read “1. During the period beginning on the effective date of this NPDES permit modification and lasting until July 31, 2025…”

5. Deleted monthly final effluent concentration and loading limitations, as well as the sampling and monitoring requirements for STORET Codes 00640 - Nitrogen, Inorganic, Total (winter).

6. Revised monthly final effluent concentrations and loading limitations from STORET Codes 00640 - Nitrogen, Inorganic, Total (summer) to STORET Codes 00640 - Nitrogen, Inorganic, Total, and updated the monthly effluent concentration to 10 mg/l and monthly loading limitation to 227.1 kg/day.

7. Revised Note a. on Page 4 to include Total Kjeldahl Nitrogen and total phosphorus.

8. Revised the header statement on Page 5 for the Final Effluent Limitations and Monitoring Requirements table for outfall 4PK00001001 to read “2. During the period beginning on August 1, 2025, and lasting until the expiration date…”

9. Deleted monthly final effluent concentration and loading limitations, as well as sampling and monitoring requirements for STORET Codes 00640 - Nitrogen, Inorganic, Total (winter).

10. Revised the monthly final effluent concentration and loading limitation from STORET Codes 00640 - Nitrogen, Inorganic, Total (summer) to STORET Codes 00640 - Nitrogen, Inorganic, Total and updated the effluent concentrations to 10 mg/l and monthly loading limitation to 227.1 kg/day.

11. Revised Note a on Page 7 to include Total Kjeldahl Nitrogen and total phosphorus.

12. Revised the header statement on Page 8 for the Final Effluent Limitations and Monitoring Requirements table for outfall 4PK00001602 to read “3. During the period beginning on the effective date of this NPDES permit modification….”

11. Revised the header statement on Page 9 for the SSO Monitoring Effluent Limitations and Monitoring Requirements table in Part I.B for Station 4PK00001300 to read “1. SSO Monitoring. During the period beginning on the effective date of this NPDES permit modification…”

12. Revised the header statement on Page 10 for the Part I.B. Sludge Monitoring Requirements table for Station 4PQ00006586 to read “3. Sludge Monitoring. During the period beginning on the effective date of this NPDES permit modification…”

13. Revised the header statement on Page 11 for the Part I.B. Sludge Monitoring Requirements table for Station 4PQ00006588 to read “3. Sludge Monitoring. During the period beginning on the effective date of this NPDES permit modification…”

14. Revised the header statement on Page 12 for the Part I.B. Influent Monitoring Requirements for Station 4PK00001601 to read “4. Influent Monitoring. During the period beginning on the effective date of this NPDES permit modification…”

15. Revised Note a. on Page 13 to include Total Kjeldahl Nitrogen.

16. Revised the header statement on Page 14 for the Part I.B. Upstream Monitoring Requirements for Station 4PQ0006801 to read “5. Upstream Monitoring. During the period beginning on the effective date of this NPDES permit modification…”

17. Revised the header statement on Page 15 for the Part I.B. Downstream-Farfield Monitoring Requirements for Station 4PQ00006901 to read “6. Downstream Fairfield Monitoring. During the period beginning on the effective date of this NPDES permit modification…”

18. Revised Note a. on Page 15 to include total phosphorus.

19. Revised the header statement on Page 16 for the Part I.B. Downstream-Nearfield Monitoring Requirements for Station 4PQ00006902 to read “6. Downstream Fairfield Monitoring. During the period beginning on the effective date of this NPDES permit modification…”

Attached is the modified NPDES permit.

All terms and conditions of the existing permit not recommended for modification by this document will remain in effect. Any modified term or condition contained in this modification shall supersede, on the date this modification is effective, the existing respective term or condition of the permit.

When the modification is effective, the Ohio EPA permit number will be changed to 4PK00001*ND. The application number will remain OH0054399.

_____
Anne M. Vogel
Director

Ohio EPA Permit No.: 4PK00001*ND
Application No: OH0054399

Modification Action Date: January 29, 2024
Modification Effective Date: PROPOSED
Modification Expiration Date: Jul 31, 2028

Ohio Environmental Protection Agency
Authorization to Discharge Under the
National Pollutant Discharge Elimination System

In compliance with the provisions of the Federal Water Pollution Control Act, as amended (33 U.S.C. 1251 et. seq., hereinafter referred to as the "Act"), and the Ohio Water Pollution Control Act (Ohio Revised Code Section 6111),

Delaware County Commissioners
Olentangy Environmental Control Center

is authorized by the Ohio Environmental Protection Agency, hereinafter referred to as "Ohio EPA," to discharge from the Olentangy Environmental Control Center wastewater treatment works, located at 10333 Olentangy River Road, Powell, Ohio, Delaware County, and discharging to the Olentangy River in accordance with the conditions specified in Parts I, II, III, IV, V, and VI of this permit.

In accordance with the antidegradation rule, OAC 1-3745-1-05, I have determined that a lowering of water quality in Olentangy River is necessary. A waiver, outlined in section (D)(3)(b) of the rule, was granted to this application. The above decision was reached only after performing the required review and public participation activities not waived by section (D)(3).

This permit is conditioned upon payment of applicable fees as required by Section 3745.11 of the Ohio Revised Code.

This permit and the authorization to discharge shall expire at midnight on the expiration date shown above. In order to receive authorization to discharge beyond the above date of expiration, the permittee shall submit such information and forms as are required by the Ohio EPA no later than 180 days prior to the above date of expiration.

_____
Anne M. Vogel
Director

Total Pages: 62

PART I, A. FINAL EFFLUENT LIMITATIONS AND MONITORING REQUIREMENTS

1. During the period beginning on the effective date of this NPDES permit modification and lasting until July 31, 2025, the permittee is authorized to discharge in accordance with the following limitations and monitoring requirements from the following outfall: 4PK00001001. See Part II, OTHER REQUIREMENTS, for locations of effluent sampling.

Table - Final Outfall - 001 - Initial

Effluent Characteristic	Discharge Limitations							Monitoring Requirements		
Parameter	Concentration Specified Units				Loading* kg/day			Measuring Frequency	Sampling Type	Monitoring Months
	Maximum	Minimum	Weekly	Monthly	Daily	Weekly	Monthly			
00010 - Water Temperature – C	-	-	-	-	-	-	-	1/Day	Maximum Indicating Thermometer	All
00300 - Dissolved Oxygen - mg/l	-	5.0	-	-	-	-	-	1/Day	Multiple Grab	All
00530 - Total Suspended Solids - mg/l	-	-	18	12	-	409	273	3/Week	24hr Composite	All
00552 - Oil and Grease, Hexane Extr Method - mg/l	10	-	-	-	-	-	-	1 / 2 Weeks	Grab	All
00610 - Nitrogen, Ammonia (NH3) - mg/l	-	-	1.18	0.78	-	26.8	17.7	3/Week	24hr Composite	Summer
00610 - Nitrogen, Ammonia (NH3) - mg/l	-	-	1.93	1.28	-	43.8	29.1	3/Week	24hr Composite	Winter
00625 - Nitrogen Kjeldahl, Total - mg/l	-	-	-	-	-	-	-	1/Month	24hr Composite	All
00630 - Nitrite Plus Nitrate, Total - mg/l	-	-	-	-	-	-	-	1/Month	24hr Composite	All
00640 - Nitrogen, Inorganic, Total - mg/l	-	-	-	10	-	-	227.1	1/Month	24hr Composite	All
00665 - Phosphorus, Total (P) - mg/l	-	-	-	1.0	-	-	22.8	1/Week	24hr Composite	All

Effluent Characteristic	Discharge Limitations							Monitoring Requirements		
Parameter	Concentration Specified Units				Loading* kg/day			Measuring Frequency	Sampling Type	Monitoring Months
	Maximum	Minimum	Weekly	Monthly	Daily	Weekly	Monthly			
00671 - Orthophosphate, Dissolved (as P) - mg/l	-	-	-	-	-	-	-	1/Month	Grab	All
01074 - Nickel, Total Recoverable - ug/l	-	-	-	-	-	-	-	1/Quarter	24hr Composite	Quarterly - Tox2
01094 - Zinc, Total Recoverable - ug/l	-	-	-	-	-	-	-	1/Quarter	24hr Composite	Quarterly - Tox2
01113 - Cadmium, Total Recoverable - ug/l	-	-	-	-	-	-	-	1/Quarter	24hr Composite	Quarterly - Tox2
01114 - Lead, Total Recoverable - ug/l	-	-	-	-	-	-	-	1/Quarter	24hr Composite	Quarterly - Tox2
01118 - Chromium, Total Recoverable - ug/l	-	-	-	-	-	-	-	1/Quarter	24hr Composite	Quarterly - Tox2
01119 - Copper, Total Recoverable - ug/l	-	-	-	-	-	-	-	1/Month	24hr Composite	All
01220 - Chromium, Dissolved Hexavalent - ug/l	-	-	-	-	-	-	-	1/Quarter	Grab	Quarterly - Tox2
31648 - E. coli - #/100 ml	-	-	284	126	-	-	-	3/Week	Grab	Summer
39100 - Bis(2-ethylhexyl) Phthalate - ug/l	-	-	-	-	-	-	-	1/Month	Composite	All
50050 - Flow Rate - MGD	-	-	-	-	-	-	-	1/Day	Continuous	All
50092 - Mercury, Total (Low Level) - ng/l	-	-	-	-	-	-	-	1/Quarter	Grab	Quarterly - Tox2
51173 - Cyanide, Free (Low-Level) - ug/l	-	-	-	-	-	-	-	1/Quarter	Grab	Quarterly - Tox2
51428 - Bypass Volume - MGAL	-	-	-	-	-	-	-	When Disch.	Total	All

Effluent Characteristic	Discharge Limitations							Monitoring Requirements		
Parameter	Concentration Specified Units				Loading* kg/day			Measuring Frequency	Sampling Type	Monitoring Months
	Maximum	Minimum	Weekly	Monthly	Daily	Weekly	Monthly			
61425 - Acute Toxicity, Ceriodaphnia dubia - TUa	-	-	-	-	-	-	-	1/Quarter	24hr Composite	Quarterly - Tox2
61426 - Chronic Toxicity, Ceriodaphnia dubia - TUc	-	-	-	-	-	-	-	1/Quarter	24hr Composite	Quarterly - Tox2
61427 - Acute Toxicity, Pimephales promelas - TUa	-	-	-	-	-	-	-	1/Quarter	24hr Composite	Quarterly - Tox2
61428 - Chronic Toxicity, Pimephales promelas - TUc	-	-	-	-	-	-	-	1/Quarter	24hr Composite	Quarterly - Tox2
61941 - pH, Maximum - S.U.	9.0	-	-	-	-	-	-	1/Day	Multiple Grab	All
61942 - pH, Minimum - S.U.	-	6.5	-	-	-	-	-	1/Day	Multiple Grab	All
70300 - Residue, Total Filterable - mg/l	-	-	-	-	-	-	-	1/Month	24hr Composite	All
80082 - CBOD 5 day - mg/l	-	-	12.8	8.5	-	291	193	3/Week	24hr Composite	All

Notes for Station Number 4PK00001001:
* Effluent loadings based on average design flow of 6.0 MGD.

a. Cadmium, chromium, copper, lead, nickel, zinc, Total Kjeldahl Nitrogen, total phosphorus, and total filterable residue monitoring, see Part II, Item M.
b. Dissolved hexavalent chromium monitoring, see Part II, Items G and N.
c. Low level mercury monitoring, see Part II, Item U.
d. Orthophosphate monitoring, see Part II, Item V.
e. Free cyanide monitoring, see Part II, Item T.
f. Bis(2ethylhexyl) Phthalate monitoring, see Part II, Item J.
g. Whole effluent toxicity monitoring, see Part II, Item X.
h. Quarterly-Tox2 sampling shall be conducted during the months of February, May, August, and November.
i. Bypass Volume, see Part II, Item Z.

PART I, A. FINAL EFFLUENT LIMITATIONS AND MONITORING REQUIREMENTS

2. During the period beginning on August 1, 2025, and lasting until the expiration date, the permittee is authorized to discharge in accordance with the following limitations and monitoring requirements from the following outfall: 4PK00001001. See Part II, OTHER REQUIREMENTS, for locations of effluent sampling.

Table - Final Outfall - 001 - Final

Effluent Characteristic	Discharge Limitations							Monitoring Requirements		
Parameter	Concentration Specified Units				Loading* kg/day			Measuring Frequency	Sampling Type	Monitoring Months
	Maximum	Minimum	Weekly	Monthly	Daily	Weekly	Monthly			
00010 - Water Temperature - C	-	-	-	-	-	-	-	1/Day	Maximum Indicating Thermometer	All
00300 - Dissolved Oxygen - mg/l	-	5.0	-	-	-	-	-	1/Day	Multiple Grab	All
00530 - Total Suspended Solids - mg/l	-	-	18	12	-	409	273	3/Week	24hr Composite	All
00552 - Oil and Grease, Hexane Extr Method - mg/l	10	-	-	-	-	-	-	1 / 2 Weeks	Grab	All
00610 - Nitrogen, Ammonia (NH3) - mg/l	-	-	1.18	0.78	-	26.8	17.7	3/Week	24hr Composite	Summer
00610 - Nitrogen, Ammonia (NH3) - mg/l	-	-	1.93	1.28	-	43.8	29.1	3/Week	24hr Composite	Winter
00625 - Nitrogen Kjeldahl, Total - mg/l	-	-	-	-	-	-	-	1/Month	24hr Composite	All
00630 - Nitrite Plus Nitrate, Total - mg/l	-	-	-	-	-	-	-	1/Month	24hr Composite	All
00640 - Nitrogen, Inorganic, Total - mg/l	-	-	-	10	-	-	227.1	1/Month	24hr Composite	All
00665 - Phosphorus, Total (P) - mg/l	-	-	-	1.0	-	-	22.8	1/Week	24hr Composite	All

Effluent Characteristic	Discharge Limitations							Monitoring Requirements		
Parameter	Concentration Specified Units				Loading* kg/day			Measuring Frequency	Sampling Type	Monitoring Months
	Maximum	Minimum	Weekly	Monthly	Daily	Weekly	Monthly			
00671 - Orthophosphate, Dissolved (as P) - mg/l	-	-	-	-	-	-	-	1/Month	Grab	All
01074 - Nickel, Total Recoverable - ug/l	-	-	-	-	-	-	-	1/Quarter	24hr Composite	Quarterly - Tox2
01094 - Zinc, Total Recoverable - ug/l	-	-	-	-	-	-	-	1/Quarter	24hr Composite	Quarterly - Tox2
01113 - Cadmium, Total Recoverable - ug/l	-	-	-	-	-	-	-	1/Quarter	24hr Composite	Quarterly - Tox2
01114 - Lead, Total Recoverable - ug/l	-	-	-	-	-	-	-	1/Quarter	24hr Composite	Quarterly - Tox2
01118 - Chromium, Total Recoverable - ug/l	-	-	-	-	-	-	-	1/Quarter	24hr Composite	Quarterly - Tox2
01119 - Copper, Total Recoverable - ug/l	-	-	-	-	-	-	-	1/Month	24hr Composite	All
01220 - Chromium, Dissolved Hexavalent - ug/l	-	-	-	-	-	-	-	1/Quarter	Grab	Quarterly - Tox2
31648 - E. coli - #/100 ml	-	-	284	126	-	-	-	3/Week	Grab	Summer
39100 - Bis(2-ethylhexyl) Phthalate - ug/l	2100	-	-	23	48	-	0.52	1/Month	Composite	All
50050 - Flow Rate - MGD	-	-	-	-	-	-	-	1/Day	Continuous	All
50092 - Mercury, Total (Low Level) - ng/l	-	-	-	-	-	-	-	1/Quarter	Grab	Quarterly - Tox2
51173 - Cyanide, Free (Low-Level) - ug/l	-	-	-	-	-	-	-	1/Quarter	Grab	Quarterly - Tox2
51428 - Bypass Volume - MGAL	-	-	-	-	-	-	-	When Disch.	Total	All

Effluent Characteristic	Discharge Limitations							Monitoring Requirements		
Parameter	Concentration Specified Units				Loading* kg/day			Measuring Frequency	Sampling Type	Monitoring Months
	Maximum	Minimum	Weekly	Monthly	Daily	Weekly	Monthly			
61425 - Acute Toxicity, Ceriodaphnia dubia - TUa	-	-	-	-	-	-	-	1/Quarter	24hr Composite	Quarterly - Tox2
61426 - Chronic Toxicity, Ceriodaphnia dubia - TUc	-	-	-	-	-	-	-	1/Quarter	24hr Composite	Quarterly - Tox2
61427 - Acute Toxicity, Pimephales promelas - TUa	-	-	-	-	-	-	-	1/Quarter	24hr Composite	Quarterly - Tox2
61428 - Chronic Toxicity, Pimephales promelas - TUc	-	-	-	-	-	-	-	1/Quarter	24hr Composite	Quarterly - Tox2
61941 - pH, Maximum - S.U.	9.0	-	-	-	-	-	-	1/Day	Multiple Grab	All
61942 - pH, Minimum - S.U.	-	6.5	-	-	-	-	-	1/Day	Multiple Grab	All
70300 - Residue, Total Filterable - mg/l	-	-	-	-	-	-	-	1/Month	24hr Composite	All
80082 - CBOD 5 day - mg/l	-	-	12.8	8.5	-	291	193	3/Week	24hr Composite	All

Notes for Station Number 4PK00001001:
* Effluent loadings based on average design flow of 6.0 MGD.

a. Cadmium, chromium, copper, lead, nickel, zinc, Total Kjeldahl Nitrogen, total phosphorus, and total filterable residue monitoring, see Part II, Item M.
b. Dissolved hexavalent chromium monitoring, see Part II, Items G and N.
c. Low level mercury monitoring, see Part II, Item U.
d. Orthophosphate monitoring, see Part II, Item V.
e. Free cyanide monitoring, see Part II, Item T.
f. Bis(2ethylhexyl)Phthalate monitoring, see Part II, Item J.
g. Whole effluent toxicity monitoring, see Part II, Item X.
h. Quarterly-Tox2 sampling shall be conducted during the months of February, May, August, and November.
i. Bypass Volume, see Part II, Item Z.

PART I, A. FINAL EFFLUENT LIMITATIONS AND MONITORING REQUIREMENTS

3. During the period beginning on the effective date of this NPDES permit modification and lasting until the expiration date, the permittee is authorized to discharge in accordance with the following limitations and monitoring requirements from the following outfall: 4PK00001602. See Part II, OTHER REQUIREMENTS, for locations of effluent sampling.

Table - Internal Monitoring Station - 602 - Final

Effluent Characteristic	Discharge Limitations							Monitoring Requirements		
Parameter	Concentration Specified Units				Loading* kg/day			Measuring Frequency	Sampling Type	Monitoring Months
	Maximum	Minimum	Weekly	Monthly	Daily	Weekly	Monthly			
00051 - Bypass Occurrence - No./Day	-	-	-	-	-	-	-	When Disch.	24hr Total	All
00052 - Bypass Total Hours Per Day - Hrs/Day	-	-	-	-	-	-	-	When Disch.	24hr Total	All
00530 - Total Suspended Solids - mg/l	-	-	-	-	-	-	-	When Disch.	Grab	All
51428 - Bypass Volume - MGAL	-	-	-	-	-	-	-	When Disch.	24hr Total	All
80082 - CBOD 5 day - mg/l	-	-	-	-	-	-	-	When Disch.	Grab	All

Notes for Station Number 4PK00001602:

a. Data for 24-hour total flow, bypass occurrence, and bypass duration may be estimated if a measuring device is not available.

b. A Discharge Monitoring Report (DMR) for this station must be submitted every month.

c. Monitoring and sampling shall be conducted and reported on each day that there is a discharge through this station.

d. If there are no discharges during the entire month, select the "No Discharge" check box on the data entry form and PIN the eDMR.

e. Bypass Occurrence: If a discharge from this station occurs intermittently during a day, starting and stopping several times, report "1" for that day. If a discharge from this station occurs on more than one day but is the result of a continuing precipitation event, it should be counted as one occurrence: Report "1" on the first day of the discharge.

f. Discharge through this station is prohibited. The Director may take enforcement action for violations of this prohibition unless the three conditions specified at 40 CFR 122.41(m) and in Part III, Item 11.C.1 of this permit are met.. See Part II, Items Z and AA.

PART I, B. SSO LIMITATIONS AND MONITORING REQUIREMENTS

1. SSO Monitoring. During the period beginning on the effective date of this NPDES permit modification and lasting until the expiration date, the permittee shall monitor at Station Number: 4PK00001300, and report to the Ohio EPA in accordance with the following table. See Part II, OTHER REQUIREMENTS, for location of sampling.

Table - SSO Monitoring - 300 - Final

Effluent Characteristic	Discharge Limitations							Monitoring Requirements		
Parameter	Concentration Specified Units				Loading* kg/day			Measuring Frequency	Sampling Type	Monitoring Months
	Maximum	Minimum	Weekly	Monthly	Daily	Weekly	Monthly			
74062 - Overflow Occurrence - No./Month	-	-	-	-	-	-	-	1/Month	Total	All

Notes for Station Number 4PK00001300:

a. A sanitary sewer overflow is an overflow, spill, release, or diversion of wastewater from a sanitary sewer system. Although the above table indicates that the Measuring Frequency for Overflow Occurrence is 1/Month, the intent of that provision is to specify a reporting frequency for Overflow Occurrence, not a monitoring frequency. The monitoring requirement under this permit is that these overflows shall be monitored on each day when they discharge. Only sanitary sewer overflows that enter waters of the state, either directly or through a storm sewer or other conveyance, must be reported under this monitoring station.

b. For the purpose of counting occurrences, each location on the sanitary sewer system where there is an overflow, spill, release, or diversion of wastewater on a given day that enters waters of the state is counted as one occurrence. For example, if on a given day overflows occur from a manhole at one location and from a damaged pipe at another location and they both enter waters of the state, record two occurrences for that day. If overflows from both locations continue on the following day, record two occurrences for the following day. At the end of the month, total the daily occurrences and report this number on Day 1 of the DMR. If there are no overflows during the entire month, report "zero" (0).

c. All sanitary sewer overflows are prohibited.

d. See Part II, Items D and E.

PART I, B. SLUDGE LIMITATIONS AND MONITORING REQUIREMENTS

2. Sludge Monitoring. During the period beginning on the effective date of this NPDES permit modification and lasting until the expiration date, the permittee shall monitor the treatment works' final sludge at Station Number: 4PK00001586, and report to the Ohio EPA in accordance with the following table. See Part II, OTHER REQUIREMENTS, for location of sludge sampling.

Table - Sludge Monitoring - 586 - Final

Effluent Characteristic	Discharge Limitations							Monitoring Requirements		
Parameter	Concentration Specified Units				Loading* kg/day			Measuring Frequency	Sampling Type	Monitoring Months
	Maximum	Minimum	Weekly	Monthly	Daily	Weekly	Monthly			
51129 - Sludge Fee Weight - dry tons	-	-	-	-	-	-	-	1/Year	Total	December

Notes for Station Number 4PK00001586:

a. Monitoring is required when sewage sludge is removed from the permittee's facility for disposal in a solid waste landfill. The total Sludge Fee Weight of sewage sludge disposed of in a solid waste landfill for the entire year shall be reported on the December Discharge Monitoring Report (DMR).

b. If no sewage sludge is removed from the permittee's facility for disposal in a solid waste landfill during the year, select the "No Discharge" check box on the data entry form and PIN the eDMR.

c. Sludge fee weight means sludge weight, in dry U.S. tons, excluding any admixtures such as liming material or bulking agents.

d. See Part II, Items P, Q, R and S.

PART I, B. SLUDGE LIMITATIONS AND MONITORING REQUIREMENTS

3. Sludge Monitoring. During the period beginning on the effective date of this NPDES permit modification and lasting until the expiration date, the permittee shall monitor the treatment works' final sludge at Station Number: 4PK00001588, and report to the Ohio EPA in accordance with the following table. See Part II, OTHER REQUIREMENTS, for location of sludge sampling.

Table - Sludge Monitoring - 588 - Final

Effluent Characteristic	Discharge Limitations							Monitoring Requirements		
Parameter	Concentration Specified Units				Loading* kg/day			Measuring Frequency	Sampling Type	Monitoring Months
	Maximum	Minimum	Weekly	Monthly	Daily	Weekly	Monthly			
80991 - Sludge Volume, Gallons – Gals	-	-	-	-	-	-	-	1/Year	Total	December

Notes for Station Number 4PK00001588:

a. Monitoring is required when sewage sludge is removed from the permittee's facility for transfer to another NPDES permit holder. The total sludge weight or sludge volume transferred to another NPDES permit holder for the entire year shall be reported on the December Discharge Monitoring Report (DMR).

b. If no sewage sludge is removed from the permittee's facility for transfer to another NPDES permit holder during the year, select the "No Discharge" check box on the data entry form and PIN the eDMR.

c. Sludge weight is a calculated total for the year. To convert from gallons of liquid sewage sludge to dry tons of sewage sludge: dry tons = gallons x 8.34 (lbs./gallon) x 0.0005 (tons/lb.) x decimal fraction total solids.

d. See Part II, Items P, Q, R and S.

PART I, B. INFLUENT MONITORING REQUIREMENTS

4. Influent Monitoring. During the period beginning on the effective date of this NPDES permit modification and lasting until the expiration date, the permittee shall monitor the treatment works' influent wastewater at Station Number: 4PK00001601, and report to the Ohio EPA in accordance with the following table. Samples of influent used for determination of net values or percent removal must be taken the same day as those samples of effluent used for that determination. See Part II, OTHER REQUIREMENTS, for location of influent sampling.

Table - Influent Monitoring - 601 - Final

Effluent Characteristic	Discharge Limitations							Monitoring Requirements		
Parameter	Concentration Specified Units				Loading* kg/day			Measuring Frequency	Sampling Type	Monitoring Months
	Maximum	Minimum	Weekly	Monthly	Daily	Weekly	Monthly			
00530 - Total Suspended Solids - mg/l	-	-	-	-	-	-	-	3/Week	24hr Composite	All
00625 - Nitrogen Kjeldahl, Total - mg/l	-	-	-	-	-	-	-	1/Month	24hr Composite	All
00720 - Cyanide, Total - mg/l	-	-	-	-	-	-	-	1/Quarter	Grab	Quarterly - Tox2
01074 - Nickel, Total Recoverable - ug/l	-	-	-	-	-	-	-	1/Quarter	24hr Composite	Quarterly - Tox2
01094 - Zinc, Total Recoverable - ug/l	-	-	-	-	-	-	-	1/Quarter	24hr Composite	Quarterly - Tox2
01113 - Cadmium, Total Recoverable - ug/l	-	-	-	-	-	-	-	1/Quarter	24hr Composite	Quarterly - Tox2
01114 - Lead, Total Recoverable - ug/l	-	-	-	-	-	-	-	1/Quarter	24hr Composite	Quarterly - Tox2
01118 - Chromium, Total Recoverable - ug/l	-	-	-	-	-	-	-	1/Quarter	24hr Composite	Quarterly - Tox2
01119 - Copper, Total Recoverable - ug/l	-	-	-	-	-	-	-	1/Month	24hr Composite	All
01220 - Chromium, Dissolved Hexavalent - ug/l	-	-	-	-	-	-	-	1/Quarter	Grab	Quarterly - Tox2

Effluent Characteristic	Discharge Limitations							Monitoring Requirements		
Parameter	Concentration Specified Units				Loading* kg/day			Measuring Frequency	Sampling Type	Monitoring Months
	Maximum	Minimum	Weekly	Monthly	Daily	Weekly	Monthly			
50092 - Mercury, Total (Low Level) - ng/l	-	-	-	-	-	-	-	1/Quarter	Grab	Quarterly - Tox2
61941 - pH, Maximum - S.U.	-	-	-	-	-	-	-	1/Day	Multiple Grab	All
61942 - pH, Minimum - S.U.	-	-	-	-	-	-	-	1/Day	Multiple Grab	All
80082 - CBOD 5 day - mg/l	-	-	-	-	-	-	-	3/Week	24hr Composite	All

Notes for Station Number 4PK00001601:

a. Cadmium, chromium, copper, lead, nickel, zinc and Total Kjeldahl Nitrogen monitoring, see Part II, Item M.

b. Dissolved hexavalent chromium, mercury, total cyanide monitoring, see Part II, Item G and O.

c. Quarterly-Tox2 sampling shall be conducted during the months of February, May, August, and November.

PART I, B. UPSTREAM MONITORING REQUIREMENTS

5. Upstream Monitoring. During the period beginning on the effective date of this NPDES permit modification and lasting until the expiration date, the permittee shall monitor the receiving stream, upstream of the point of discharge at Station Number: 4PK00001801, and report to the Ohio EPA in accordance with the following table. See Part II, OTHER REQUIREMENTS, for location of sampling.

Table - Upstream Monitoring - 801 - Final

Effluent Characteristic	Discharge Limitations							Monitoring Requirements		
Parameter	Concentration Specified Units				Loading* kg/day			Measuring Frequency	Sampling Type	Monitoring Months
	Maximum	Minimum	Weekly	Monthly	Daily	Weekly	Monthly			
00010 - Water Temperature - C	-	-	-	-	-	-	-	1/Month	Grab	All
00300 - Dissolved Oxygen - mg/l	-	-	-	-	-	-	-	1/Month	Grab	All
00400 - pH - S.U.	-	-	-	-	-	-	-	1/Month	Grab	All
00610 - Nitrogen, Ammonia (NH3) - mg/l	-	-	-	-	-	-	-	1/Month	Grab	All
00665 - Phosphorus, Total (P) - mg/l	-	-	-	-	-	-	-	1/Month	Grab	All
31648 - E. coli - #/100 ml	-	-	-	-	-	-	-	1/Month	Grab	Summer
61432 - 48-Hr. Acute Toxicity Ceriodaphnia dubia - % Affected	-	-	-	-	-	-	-	1/Quarter	Grab	Quarterly - Tox2
61435 - 96-Hr. Acute Toxicity Pimephales promela - % Affected	-	-	-	-	-	-	-	1/Quarter	Grab	Quarterly - Tox2
61438 - 7-Day Chronic Toxicity Ceriodaphnia dubia - % Affected	-	-	-	-	-	-	-	1/Quarter	Grab	Quarterly - Tox2
61441 - 7-Day Chronic Toxicity Pimephales promelas - % Affected	-	-	-	-	-	-	-	1/Quarter	Grab	Quarterly - Tox2

Notes for Station Number 4PK00001801:

a. Sampling for the respective/common parameters shall occur on the same day as Outfall 4PK00001001.
b. Whole effluent toxicity testing, see Part II, Item X.
c. Quarterly-Tox2 sampling shall be conducted during the months of February, May, August, and November.

PART I, B. DOWNSTREAM-FARFIELD MONITORING REQUIREMENTS

6. Downstream-Farfield Monitoring. During the period beginning on the effective date of this NPDES permit modification and lasting until the expiration date, the permittee shall monitor the receiving stream, downstream of the point of discharge, at Station Number: 4PK00001901, and report to the Ohio EPA in accordance with the following table. See Part II, OTHER REQUIREMENTS, for location of sampling.

Table - Downstream-Farfield Monitoring - 901 - Final

Effluent Characteristic	Discharge Limitations							Monitoring Requirements		
Parameter	Concentration Specified Units				Loading* kg/day			Measuring Frequency	Sampling Type	Monitoring Months
	Maximum	Minimum	Weekly	Monthly	Daily	Weekly	Monthly			
00010 - Water Temperature - C	-	-	-	-	-	-	-	1/Month	Grab	All
00300 - Dissolved Oxygen - mg/l	-	-	-	-	-	-	-	1/Month	Grab	All
00400 - pH - S.U.	-	-	-	-	-	-	-	1/Month	Grab	All
00610 - Nitrogen, Ammonia (NH3) - mg/l	-	-	-	-	-	-	-	1/Month	Grab	All
00665 - Phosphorus, Total (P) - mg/l	-	-	-	-	-	-	-	1/Month	Grab	All
00900 - Hardness, Total (CaCO3) - mg/l	-	-	-	-	-	-	-	1/Month	Grab	All
31648 - E. coli - #/100 ml	-	-	-	-	-	-	-	1/Month	Grab	Summer
61438 - 7-Day Chronic Toxicity Ceriodaphnia dubia - % Affected	-	-	-	-	-	-	-	1/Quarter	Grab	Quarterly - Tox2
61441 - 7-Day Chronic Toxicity Pimephales promelas - % Affected	-	-	-	-	-	-	-	1/Quarter	Grab	Quarterly - Tox2
70300 - Residue, Total Filterable - mg/l	-	-	-	-	-	-	-	1/Month	Grab	All

Notes for Station Number 4PK00001901:

a. Water temperature, dissolved oxygen, pH, ammonia-Nitrogen, nickel, zinc, cadmium, lead, total chromium, copper, dissolved hexavalent chromium, mercury, total cyanide, and e. coli, total phosphorus, and total filterable residue monitoring, see Part II, Item M.
b. Whole effluent toxicity testing, see Part II, Item X.
c. Quarterly-Tox2 sampling shall be conducted during the months of February, May, August, and November.

Part I, B. DOWNSTREAM-NEARFIELD MONITORING REQUIREMENTS

7. Downstream-Nearfield Monitoring. During the period beginning on the effective date of this NPDES permit modification and lasting until the expiration date, the permittee shall monitor the receiving stream, downstream of the point of discharge, at Station Number: 4PK00001902, and report to the Ohio EPA in accordance with the following table. See Part II, OTHER REQUIREMENTS, for location of sampling.

Table - Downstream-Nearfield Monitoring - 902 - Final

Effluent Characteristic	Discharge Limitations							Monitoring Requirements		
Parameter	Concentration Specified Units				Loading* kg/day			Measuring Frequency	Sampling Type	Monitoring Months
	Maximum	Minimum	Weekly	Monthly	Daily	Weekly	Monthly			
61432 - 48-Hr. Acute Toxicity Ceriodaphnia dubia - % Affected	-	-	-	-	-	-	-	1/Quarter	Grab	Quarterly - Tox2
61435 - 96-Hr. Acute Toxicity Pimephales promela - % Affected	-	-	-	-	-	-	-	1/Quarter	Grab	Quarterly - Tox2

Notes for Station Number 4PK00001902:

a. Whole effluent toxicity testing, see Part II, Item X.

b. Quarterly-Tox2 sampling shall be conducted during the months of February, May, August, and November.

PART I, C. - SCHEDULE OF COMPLIANCE

Milestone Summary Report

Section	Report	Event Code	Due Date
Municipal Pretreatment Schedule	Eff Limits For Pollutants	52599	February 1, 2024
Municipal Pretreatment Schedule	Pretreatment Pgm Submission	53199	August 1, 2024
Bis (2ethylhexyl)Phthalate Limitations	Special Study	21599	August 1, 2024
Paragraph 2	Final Compliance w/ Eff Limits	5699	August 1, 2025

Municipal Pretreatment Schedule

1. The permittee shall evaluate the adequacy of local industrial user limitations to prevent the introduction of pollutants into the POTW which will interfere with the operation of the POTW, pass through the POTW in amounts that exceed water quality standard-based limits, be incompatible with the POTW, or limit wastewater or sludge use options. Technical justification for revising local industrial user limitations to attain compliance with final table limits, along with a pretreatment program modification request, or technical justification for retaining existing local industrial user limitations shall be submitted for acceptance to Ohio EPA, Central Office Pretreatment Unit and to Ohio EPA, Central District Office, Division of Surface Water, as soon as possible, but no later than February 1, 2024.

Technical justification is required for arsenic, cadmium, total chromium, dissolved hexavalent chromium, copper, free cyanide, lead, mercury, molybdenum, nickel, silver, zinc
and Bis(2ethylhexyl)Phthalate unless screening of wastewater and sludge indicate these pollutants are not present in significant amounts. Technical justification is also required for any other pollutants where a local limit may be necessary to protect against pass through, interference or sludge disposal.

To demonstrate technical justification for new local industrial user limits or justification for retaining existing limits, a local limits technical justification report shall be submitted to Ohio EPA. The report shall be consistent with the guidance, procedures and methodologies found in Ohio EPA's and USEPA's local limits guidance documents available at:

https://epa.ohio.gov/divisions-and-offices/surface-water/permitting/pretreatment-program

The report shall include the following:

a. Identification of and justification for pollutants of concern for which local limits will be developed.

b. Treatment plant flow and industrial flows to which local limits will be applied. If the POTW is accepting any hauled waste include for each type of hauled waste (e.g. landfill leachate, septage), at least 5 data points detailing the dates and volumes of discharge and sampling results for all the pollutants of concern.

c. Domestic/background concentrations. To determine domestic/background concentrations, the permittee shall, at a minimum, sample at three different locations for five consecutive days or two different locations for seven consecutive days. These locations shall, to the extent possible, convey only domestic wastewater.

d. Treatment plant removal efficiencies. Whenever possible, site specific removal efficiencies shall be

determined using actual plant data with analytical detection levels that are sensitive enough to provide values above the reporting level (RL) or practical quantification limit (PQL).

e. A comparison of maximum allowable headworks loadings based on all applicable criteria. Criteria may include sludge disposal, NPDES permit limits, waste load allocation values, and interference with biological processes such as activated sludge, sludge digestion, nitrification, etc. Calculation tables can be found on the Ohio EPA website at:

https://epa.ohio.gov/divisions-and-offices/surface-water/permitting/pretreatment-program

f. If revised industrial user discharge limits are proposed, the method of allocating available pollutant loads to industrial users.

g. If narrative or best management practices (BMPs) are proposed as local limits, information on how they will be implemented. When appropriate, industrial user discharge limits may include narrative local limits requiring industrial users to develop and implement BMPs. These narrative local limits may be used either alone or as a supplement to numeric limits.

h. Supporting data, assumptions, and methodologies used in establishing the information in item 1.a through 1.g above.

i. If new or revised industrial user discharge limits are proposed, the stamp and signature of a licensed Ohio professional engineer.

2. Revisions. The permittee shall submit a revised local limit technical justification report within 90 days of receiving notification from Ohio EPA of deficiencies in the submitted report.

3. If revisions to local industrial user limitations including best management practices are determined to be necessary, the permittee shall incorporate revised local industrial user limitations in all industrial user control documents, as applicable, no later than August 1, 2024.

4. Sampling Methods

a. Mercury: If the permittee uses EPA Method 245.1 or 245.2 to sample domestic background locations and mercury concentrations are below detection, the permittee shall use EPA method 1631 or 245.7 to quantify domestic background contributions of mercury.

b. Free Cyanide: The permittee shall use ASTM D7237, OIA-1677-09, or ASTM D4282-02 to quantify domestic background contributions of free cyanide. [Note: The use of ASTM D4282-02 requires supporting documentation that it meets the requirement of a "sufficiently sensitive" test procedure as defined in 40 CFR 122.44(i)(1)(iv)].

2. Bis(2ethylhexyl)Phthalate Pollutant Minimization Program (PMP) Schedule.

The permittee shall perform the following in order to meet the final effluent limits for Bis (2ethylhexyl) Phthalate no later than August 1, 2025.

a. Not later than August 1, 2024, the permittee shall submit to the Ohio EPA, Central District Office, Division of Surface Water, a report that shall include at a minimum:

i. An evaluation of potential sources of Bis(2ethylhexyl)Phthalate to the collection system.

ii. Recommendations for actions required to reduce/eliminate sources of Bis(2ethylhexyl)Phthalate in the system, along with an implementation schedule which includes fixed dates for completing these actions.

b. The permittee shall achieve the final effluent limits for Bis(2ethylhexyl)Phthalate at outfall 4PE00002001 by not later than August 1, 2025.

PART II - OTHER REQUIREMENTS

A. Operator Certification Requirements

1. Classification

a. In accordance with Ohio Administrative Code 3745-7-04, the sewage treatment facility shall be classified as a Class IV treatment works. The permittee shall designate one or more professional operator of record to oversee the technical operation of the treatment works with a valid certification of a class equal to or greater than the classification of the treatment works.

b. All sewerage (collection) systems that are tributary to this treatment works are Class II sewerage systems in accordance with paragraph (B)(1)(b) of rule 3745-7-04 of the Ohio Administrative Code. The permittee shall designate one or more professional operator of record to oversee the technical operation of the sewerage (collection) system with a valid certification of a class equal to or greater than the classification of the sewerage (collection) system.

2. Professional Operator of Record

a. Within three days of a change in a professional operator of record, the permittee shall notify the Director of the Ohio EPA of any such change on a form acceptable to Ohio EPA. The notification can be submitted either electronically via the Ohio eBusiness Center website (https://ebiz.epa.ohio.gov/login.html) or hard copy. The appropriate form can be found at the following website:

https://epa.ohio.gov/static/Portals/28/documents/opcert/Operator%20of%20Record%20Notification%20Form.pdf?ver=2018-09-11-102530-423

b. All applications for renewal of this NPDES permit shall include an updated Operator of Record Notification form along with other necessary forms and fees to be considered a complete application.

c. The professional operator of record for a class II, III, or IV treatment works or class II sewerage system may be replaced by a backup professional operator with a certificate one classification lower than the treatment works or sewerage system for a period of up to thirty consecutive days. The use of this provision does not require notification to the agency. This provision may not be used to routinely circumvent minimum staffing requirements.

d. Upon proper justification, such as military leave or long term illness, the director may authorize the replacement of the professional operator of record for a class II, III, or IV treatment works or class II sewerage system by a backup professional operator with a certificate one classification lower than the facility for a period of greater than thirty consecutive days. Such requests shall be made in writing to the appropriate district office.

3. Minimum Staffing Requirements

a. The permittee shall ensure that the treatment works professional operator of record is physically present at the facility in accordance with the minimum staffing requirements per paragraph (C)(1) of rule 3745-7-04 of the Ohio Administrative Code or the requirements from an approved 3745-7-04(C) minimum staffing hour reduction plan.

b. The permittee shall ensure that the collection system professional operator of record or a professional

operator that is certified in the field of wastewater collection or wastewater treatment, class A operators excluded, is physically present at the collection system in accordance with the minimum staffing requirements per paragraph (C)(2) of rule 3745-7-04 of the Ohio Administrative Code.

c. If Ohio EPA approves a reduction in minimum staffing requirements based upon a facility operating plan, any change in the criteria under which the operating plan was approved (e.g., retirement of a professional operator listed in the approved staffing plan, loss of the professional operator of record, reduction in the workforce, removal or failure of automation or continuous monitoring, etc.) will require that the treatment works immediately return to the minimum staffing requirements included in paragraph (C)(1) of rule 3745-7-04 of the Ohio Administrative Code.

4. Additional Staffing Requirements

Visits to all treatment works shall be performed by the permittee, the permittee's representative, or agent five days a week and noted in the operational and maintenance records required by rule 3745-7-09 of the Administrative Code. Visits shall not be necessary when the treatment works is not in operation.

B. Description of the location of the required sampling stations are as follows:

Sampling Station	Description of Location
4PK00001001	Discharge of final effluent at the post aeration tank prior to entering the Olentangy River. (Lat: 40N 01' 00";Long: 83W 02' 15")
4PK00001300	System wide sanitary sewer overflow occurrences.
4PK00001586	Waste sludge hauled to sanitary landfill.
4PK00001588	Transfer of sludge to another NPDES permitted facility.
4PK00001601	Influent wet well.
4PK00001602	Bypass around mixed media filter and disinfection.
4PK00001801	Powell Road Bridge.
4PK00001901	Behind shopping center (Downstream Farfield biomonitoring Station).
4PK00001902	Downstream Nearfield biomonitoring station.

C. All parameters, except flow, need not be monitored on days when the plant is not normally staffed (Saturdays, Sundays, and Holidays). On those days, report "AN" on the monthly report form.

D. Sanitary Sewer Overflow (SSO) Reporting Requirements

A sanitary sewer overflow is an overflow, spill, release, or diversion of wastewater from a sanitary sewer system. SSOs do not include wet weather discharges from combined sewer overflows specifically listed in Part II of this NPDES permit (if any). All SSOs are prohibited.

1. Reporting for SSOs That Imminently and Substantially Endanger Human Health

a) Immediate Notification

You must notify Ohio EPA (1-800-282-9378) and the appropriate Board of Health (i.e., city or county) within 24 hours of learning of any SSO from your sewers or from your maintenance contract areas that may imminently and substantially endanger human health. The telephone report must identify the location, estimated volume and receiving water, if any, of the overflow. An SSO that may imminently and substantially endanger human health includes dry weather overflows, major line breaks, overflow events that result in fish kills or other significant harm, overflows that expose the general public to contact with raw sewage, and overflow events that occur in sensitive waters and high exposure areas such as protection

areas for public drinking water intakes and waters where primary contact recreation occurs.

b) Follow-Up Written Report

Within 5 days of the time you become aware of any SSO that may imminently and substantially endanger human health, you must provide the Ohio EPA, Central District Office, Division of Surface Water, a written report that includes:

(i) the estimated date and time when the overflow began and stopped or will be stopped (if known);
(ii) the location of the SSO including an identification number or designation if one exists;
(iii) the receiving water (if there is one);
(iv) an estimate of the volume of the SSO (if known);
(v) a description of the sewer system component from which the release occurred (e.g., manhole, constructed overflow pipe, crack in pipe);
(vi) the cause or suspected cause of the overflow;
(vii) steps taken or planned to reduce, eliminate, and prevent reoccurrence of the overflow and a schedule of major milestones for those steps; and
(viii) steps taken or planned to mitigate the impact(s) of the overflow and a schedule of major milestones for those steps.

An acceptable 5-day follow-up written report can be filled-in or downloaded from the Ohio EPA Division of Surface Water Permits Program Technical Assistance Web page at:

https://epa.ohio.gov/divisions-and-offices/surface-water/guides-manuals/permits-program-technical-assistance

2. Reporting for All SSOs, Including Those That Imminently and Substantially Endanger Human Health

a) Discharge Monitoring Reports (DMR)

Sanitary sewer overflows that enter waters of the state, either directly or through a storm sewer or other conveyance, shall be reported on your Discharge Monitoring Reports (DMR). You must report the system-wide number of occurrences for SSOs that enter waters of the state in accordance with the requirements for station number 300. A monitoring table for this station is included in Part I, B of this NPDES permit. For the purpose of counting occurrences, each location on the sanitary sewer system where there is an overflow, spill, release, or diversion of wastewater on a given day is counted as one occurrence. For example, if on a given day overflows occur from a manhole at one location and from a damaged pipe at another location and they both enter waters of the state, you should record two occurrences for that day. If overflows from both locations continue on the following day, you should record two occurrences for the following day. At the end of the month, total the daily occurrences from all locations on your system and report this number using reporting code 74062 (Overflow Occurrence, No./Month) on the 4500 form for station number 300.

b) Annual Report

You must prepare an annual report of all SSOs in your collection system, including those that do not enter waters of the state. The annual report must be in an acceptable format (see below) and must include:

(i) A table that lists an identification number, a location description, and the receiving water (if any) for each existing SSO. If an SSO previously included in the list has been eliminated, this shall be noted. Assign each SSO location a unique identification by numbering them consecutively, beginning with 301.

(ii) A table that lists the date that an overflow occurred, the unique ID of the overflow, the name of affected receiving waters (if any), and the estimated volume of the overflow (in millions of gallons). The annual report may summarize information regarding overflows of less than approximately 1,000 gallons.

(iii) A table that summarizes the occurrence of water in basements (WIBs) by total number and by sewershed. The report shall include a narrative analysis of WIB patterns by location, frequency and cause. Only WIBs caused by a problem in the publicly-owned collection system must be included.
Not later than March 31 of each year, you must submit one copy of the annual report for the previous calendar year. The report may be submitted electronically using the NPDES Annual Sanitary Sewer Overflow Report available through the Ohio EPA eBusiness Center, Division of Surface Water NPDES Permit Applications service. Alternatively, you may submit one hardcopy of the report to Ohio EPA , Central District Office, Division of Surface Water and one copy to: Ohio EPA; Division of Surface Water; NPDES Permit Unit; P.O. Box 1049; Columbus, OH, 43216-1049. An acceptable annual SSO report can be filled-in or downloaded from the Ohio EPA Division of Surface Water Permits Program Technical Assistance Web page at:

https://epa.ohio.gov/divisions-and-offices/surface-water/guides-manuals/permits-program-technical-assistance

You also must provide adequate notice to the public of the availability of the report. Adequate public notice would include: notices posted at the community administration building, the public library and the post office; a public notice in the newspaper; or a notice sent out with all sewer bills.

E. The permittee shall maintain in good working order and operate as efficiently as possible the "treatment works" and "sewerage system" as defined in ORC 6111.01 to achieve compliance with the terms and conditions of this permit and to prevent discharges to the waters of the state, surface of the ground, basements, homes, buildings, etc.

F. Composite samples shall be comprised of a series of grab samples collected over a 24-hour period and proportionate in volume to the sewage flow rate at the time of sampling. Such samples shall be collected at such times and locations, and in such a fashion, as to be representative of the facility's overall performance.

G. Grab samples shall be collected at such times and locations, and in such fashion, as to be representative of the facility's performance.

H. Multiple grab samples shall be comprised of at least three grab samples collected at intervals of at least three hours during the period that the plant is staffed on each day for sampling. Samples shall be collected at such times and locations, and in such fashion, as to be representative of the facility's overall performance. The critical value shall be reported.

I. The treatment works must obtain at least 85 percent removal of carbonaceous biochemical oxygen demand (five-day) and suspended solids (see Part III, Item 1).

J. Monitoring for Bis(2-ethylhexyl) phthalate

Composite samples for Bis(2-ethylhexyl) phthalate shall be comprised of at least three manual grab samples collected at intervals of at least 3 hours, during an 8 hour period that the plant is staffed for sampling. The samples shall be collected and composited in glass to eliminate the potential for contamination from plastic containers; and they shall be collected at such times and locations, and in such fashion, as to be representative of the facility's overall performance.

K. POTWs that accept hazardous wastes by truck, rail, or dedicated pipeline are considered to be hazardous waste treatment, storage, and disposal facilities (TSDFs) and are subject to regulation under the Resource Conservation and Recovery Act (RCRA). Under the "permit-by-rule" regulation found at 40 CFR 270.60(c), a POTW must

1) comply with all conditions of its NPDES permit,
2) obtain a RCRA ID number and comply with certain manifest and reporting requirements under RCRA,
3) satisfy corrective action requirements, and
4) meet all federal, state, and local pretreatment requirements.

L. Water quality based permit limitations in this permit may be revised based on updated wasteload allocations or use designation rules. This permit may be modified, or revoked and reissued, to include new water quality based effluent limits or other conditions that are necessary to comply with a revised wasteload allocation, or an approved total maximum daily loads (TMDL) report as required under Section 303 (d) of the Clean Water Act.

M. Sampling for these parameters at station 4PK00001001, 4PK00001601, and 4PK00001901 shall occur the same day.

N. Sampling at station 4PK00001001 for these parameters shall occur one detention time (the time it takes for a volume of water to travel through the treatment plant) after sampling at station 4PK00001601 for the same parameters on the same day.

O. Sampling at station 4PK00001601 for these parameters shall occur one detention time (the time it takes for a volume of water to travel through the treatment plant) prior to sampling at station 4PK00001001 for the same parameters on the same day.

P. All disposal, use, storage, or treatment of sewage sludge by the permittee shall comply with Chapter 6111. of the Ohio Revised Code, Chapter 3745-40 of the Ohio Administrative Code and any further requirements specified in this NPDES permit, and any other actions of the Director that pertain to the disposal, use, storage, or treatment of sewage sludge by the permittee.

Q. Sewage sludge composite samples shall consist of a minimum of six grab samples collected at such times and locations, and in such fashion, as to be representative of the facility's sewage sludge.

R. No later than March 1 of each calendar year, the permittee shall submit a report summarizing the sewage sludge disposal, use, storage, or treatment activities of the permittee during the previous calendar year. The report shall be submitted through the Ohio EPA eBusiness Center/STREAMS, Division of Surface Water NPDES Permit Applications service.

S. Each day when sewage sludge is removed from the wastewater treatment plant for use or disposal, a representative sample of sewage sludge shall be collected and analyzed for percent total solids. This value of percent total solids shall be used to calculate the total Sewage Sludge Weight (Discharge Monitoring Report code 70316) and/or total Sewage Sludge Fee Weight (Discharge Monitoring Report code 51129) removed from the treatment plant on that day. The results of the daily monitoring and the weight calculations shall be maintained on site for a minimum of five years. The test methodology used shall be from Part 2540 G of Standard Methods for the Examination of Water and Wastewater American Public Health Association, American Water Works Association, and Water Environment Federation, using the edition which is current on the issuance date of the permit. To convert from gallons of liquid sewage sludge to dry tons of sewage sludge: dry tons = gallons x 8.34 (lbs./gallon) x 0.0005 (tons/lb.) x decimal fraction total solids.

T. Monitoring for Free Cyanide (low-level)

Currently there are three approved methods for free cyanide listed in 40 CFR 136 that have a quantification level lower than any water quality-based effluent limits: ASTM D7237-10, OIA-1677-09, and ASTM D4282-02. (Note: The use of ASTM D4282-02 requires supporting documentation that it meets the requirement of a "sufficiently sensitive" test procedure as defined in 40 CFR 122.44(i)(1)(iv)). The permittee shall use one of these approved methods.

U. Monitoring for Mercury (low-level)

The permittee shall use either EPA Method 1631 or EPA Method 245.7 promulgated under 40 CFR 136 to comply with the influent and effluent mercury monitoring requirements of this permit.

V. Monitoring for Dissolved Orthophosphate (as P)

The permittee shall monitor for dissolved orthophosphate by grab sample. The permittee shall filter the grab sample within 15 minutes of collection using a 0.45-micron filter. The filtered sample must be analyzed within 48 hours. Samples shall be collected at such times and locations, and in such fashion, as to be representative of the facility's overall performance.

W. Outfall Signage

The permittee shall maintain a permanent marker on the stream bank at each outfall that is regulated under this NPDES permit. This includes final outfalls, bypasses, and combined sewer overflows. The sign shall include, at a minimum, the name of the establishment to which the permit was issued, the Ohio EPA permit number, and the outfall number and a contact telephone number. The information shall be printed in letters not less than two inches in height. The sign shall be a minimum of 2 feet by 2 feet and shall be a minimum of 3 feet above ground level. The sign shall not be obstructed such that persons in boats or persons swimming on the river or someone fishing or walking along the shore cannot read the sign. Vegetation shall be periodically removed to keep the sign visible. If the outfall is normally submerged the sign shall indicate that. If the outfall is a combined sewer outfall, the sign shall indicate that untreated human sewage may be discharged from the outfall during wet weather and that harmful bacteria may be present in the water. When an existing sign is replaced or reset, the new sign shall comply with the requirements of this section.

X. Biomonitoring Program Requirements

The permittee shall continue to implement an effluent biomonitoring program to determine the toxicity of the effluent from outfall 4PK00001001.

General Requirements

All toxicity testing conducted as required by this permit shall be done in accordance with "Reporting and Testing Guidance for Biomonitoring Required by the Ohio Environmental Protection Agency" (hereinafter, the "biomonitoring guidance"), Ohio EPA, July 1998 (or current revision). The Standard Operating Procedures (SOP) or verification of SOP submittal, as described in Section 1.B. of the biomonitoring guidance shall be submitted no later than three months after the effective date of this permit. If the laboratory performing the testing has modified its protocols, a new SOP is required.

Testing Requirements

1. Chronic Bioassays

For the duration of the permit, the permittee shall conduct chronic toxicity tests, as specified in Part I,A, using water fleas (Ceriodaphnia dubia) and fathead minnows (Pimephales promelas) on effluent samples from outfall 4PK00001001. These tests shall be conducted as specified in Section 3 of the biomonitoring guidance.

2. Acute Bioassays

For the duration of the permit. Acute toxicity tests need not be performed for months in which chronic toxicity tests are conducted. Acute endpoints, as described in Section 2.H. of the biomonitoring guidance, shall be derived from the chronic test.

3. Testing of Ambient Water
In conjunction with the chronic toxicity tests, upstream control water shall be collected at a point outside the zone of effluent and receiving water interaction at station 4PK00001801. In conjunction with toxicity tests of the effluent, downstream receiving water shall be tested for chronic toxicity at station 4PK00001901 and acute toxicity at station 4PK00001902. Testing of ambient waters shall be done in accordance with Section 3 of the biomonitoring guidance.

4. Data Review

a. Reporting

Following completion of each bioassay requirement, the permittee shall report results of the tests in accordance with Sections 2.H.1., 2.H.2.a., 3.H.1., and 3.H.2.a. of the biomonitoring guidance, including reporting the results on the monthly DMR and submitting a copy of the complete test report to Ohio EPA, Division of Surface Water. The test report may be submitted electronically using the acute or chronic NPDES Biomonitoring Report Form available through the Ohio EPA eBusiness Center, Division of Surface Water NPDES Permit Applications service. Alternatively, the permittee may submit a hard copy of the report to Ohio EPA, Division of Surface Water, NPDES Permit Unit, P.O. Box 1049, Columbus, OH, 43216-1049.

Based on Ohio EPA's evaluation of the results, this permit may be modified to require additional biomonitoring, require a toxicity reduction evaluation, and/or contain whole effluent toxicity limits.

b. Definitions

TUa = Acute Toxicity Units = 100/LC50

TUc = Chronic Toxicity Units = 100/IC25

This equation for chronic toxicity units applies outside the mixing zone for warmwater, modified warmwater, exceptional warmwater, coldwater, and seasonal salmonid use designations except when the following equation is more restrictive (Ceriodaphnia dubia only):

TUc = Chronic Toxic Units = 100/square root of (NOEC x LOEC)

PART III - GENERAL CONDITIONS

1. DEFINITIONS

"Daily discharge" means the discharge of a pollutant measured during a calendar day or any 24-hour period that reasonably represents the calendar day for purposes of sampling. For pollutants with limitations expressed in units of mass, the "daily discharge" is calculated as the total mass of the pollutant discharged over the day. For pollutants with limitations expressed in other units of measurement, the "daily discharge" is calculated as the average measurement of the pollutant over the day.

"Average weekly" discharge limitation means the highest allowable average of "daily discharges" over a calendar week, calculated as the sum of all "daily discharges" measured during a calendar week divided by the number of "daily discharges" measured during that week. Each of the following 7-day periods is defined as a calendar week: Week 1 is Days 1 - 7 of the month; Week 2 is Days 8 - 14; Week 3 is Days 15 - 21; and Week 4 is Days 22 - 28. If the "daily discharge" on days 29, 30 or 31 exceeds the "average weekly" discharge limitation, Ohio EPA may elect to evaluate the last 7 days of the month as Week 4 instead of Days 22 - 28. Compliance with fecal coliform bacteria or *E.coli* bacteria limitations shall be determined using the geometric mean.

"Average monthly" discharge limitation means the highest allowable average of "daily discharges" over a calendar month, calculated as the sum of all "daily discharges" measured during a calendar month divided by the number of "daily discharges" measured during that month. Compliance with fecal coliform bacteria or E coli bacteria limitations shall be determined using the geometric mean.

"85 percent removal" means the arithmetic mean of the values for effluent samples collected in a period of 30 consecutive days shall not exceed 15 percent of the arithmetic mean of the values for influent samples collected at approximately the same times during the same period.

"Absolute Limitations" Compliance with limitations having descriptions of "shall not be less than," "nor greater than," "shall not exceed," "minimum," or "maximum" shall be determined from any single value for effluent samples and/or measurements collected.

"Net concentration" shall mean the difference between the concentration of a given substance in a sample taken of the discharge and the concentration of the same substances in a sample taken at the intake which supplies water to the given process. For the purpose of this definition, samples that are taken to determine the net concentration shall always be 24-hour composite samples made up of at least six increments taken at regular intervals throughout the plant day.

"Net Load" shall mean the difference between the load of a given substance as calculated from a sample taken of the discharge and the load of the same substance in a sample taken at the intake which supplies water to given process. For purposes of this definition, samples that are taken to determine the net loading shall always be 24-hour composite samples made up of at least six increments taken at regular intervals throughout the plant day.

"MGD" means million gallons per day.

"mg/l" means milligrams per liter.

"ug/l" means micrograms per liter.

"ng/l" means nanograms per liter.

"S.U." means standard pH unit.

"kg/day" means kilograms per day.

"Reporting Code" is a five digit number used by the Ohio EPA in processing reported data. The reporting code does not imply the type of analysis used nor the sampling techniques employed.

"Quarterly (1/Quarter) sampling frequency" means the sampling shall be done in the months of March, June, August, and December, unless specifically identified otherwise in the Effluent Limitations and Monitoring Requirements table.

"Yearly (1/Year) sampling frequency" means the sampling shall be done in the month of September, unless specifically identified otherwise in the effluent limitations and monitoring requirements table.

"Semi-annual (2/Year) sampling frequency" means the sampling shall be done during the months of June and December, unless specifically identified otherwise.

"Winter" shall be considered to be the period from November 1 through April 30.

"Bypass" means the intentional diversion of waste streams from any portion of the treatment facility.

"Summer" shall be considered to be the period from May 1 through October 31.

"Severe property damage" means substantial physical damage to property, damage to the treatment facilities which would cause them to become inoperable, or substantial and permanent loss of natural resources which can reasonably be expected to occur in the absence of a bypass. Severe property damage does not mean economic loss caused by delays in production.

"Upset" means an exceptional incident in which there is unintentional and temporary noncompliance with technology based permit effluent limitations because of factors beyond the reasonable control of the permittee. An upset does not include noncompliance to the extent caused by operational error, improperly designed treatment facilities, inadequate treatment facilities, lack of preventive maintenance, or careless or improper operation.

"Sewage sludge" means a solid, semi-solid, or liquid residue generated during the treatment of domestic sewage in a treatment works as defined in section 6111.01 of the Revised Code. "Sewage sludge" includes, but is not limited to, scum or solids removed in primary, secondary, or advanced wastewater treatment processes. "Sewage sludge" does not include ash generated during the firing of sewage sludge in a sewage sludge incinerator, grit and screenings generated during preliminary treatment of domestic sewage in a treatment works, animal manure, residue generated during treatment of animal manure, or domestic septage.

"Sewage sludge weight" means the weight of sewage sludge, in dry U.S. tons, including admixtures such as liming materials or bulking agents. Monitoring frequencies for sewage sludge parameters are based on the reported sludge weight generated in a calendar year (use the most recent calendar year data when the NPDES permit is up for renewal).

"Sewage sludge fee weight" means the weight of sewage sludge, in dry U.S. tons, excluding admixtures such as liming materials or bulking agents. Annual sewage sludge fees, as per section 3745.11(Y) of the Ohio Revised Code, are based on the reported sludge fee weight for the most recent calendar year.

2. GENERAL EFFLUENT LIMITATION

The effluent shall, at all times, be free of substances:

A. In amounts that will settle to form putrescent, or otherwise objectionable, sludge deposits; or that will adversely affect aquatic life or water fowl;

B. Of an oily, greasy, or surface-active nature, and of other floating debris, in amounts that will form noticeable accumulations of scum, foam, or sheen;

C. In amounts that will alter the natural color or odor of the receiving water to such degree as to create a nuisance;

D. In amounts that either singly or in combination with other substances are toxic to human, animal, or aquatic life;

E. In amounts that are conducive to the growth of aquatic weeds or algae to the extent that such growth become inimical to more desirable forms of aquatic life, or create conditions that are unsightly, or constitute a nuisance in any other fashion;

F. In amounts that will impair designated instream or downstream water uses

3. FACILITY OPERATION AND QUALITY CONTROL

All wastewater treatment works shall be operated in a manner consistent with the following:

A. At all times, the permittee shall maintain in good working order and operate as efficiently as possible all treatment or control facilities or systems installed or used by the permittee necessary to achieve compliance with the terms and conditions of this permit. Proper operation and maintenance also includes adequate laboratory controls and appropriate quality assurance procedures. This provision requires the operation of back-up or auxiliary facilities or similar systems which are installed by a permittee only when the operation is necessary to achieve compliance with conditions of the permit.

B. The permittee shall effectively monitor the operation and efficiency of treatment and control facilities and the quantity and quality of the treated discharge.

C. Maintenance of wastewater treatment works that results in degradation of effluent quality shall be scheduled during non-critical water quality periods and shall be carried out in a manner approved by Ohio EPA as specified in the Paragraph in the PART III entitled, "UNAUTHORIZED DISCHARGES".

4. REPORTING

A. Monitoring data required by this permit shall be submitted monthly on Ohio EPA 4500 Discharge Monitoring Report (DMR) forms using the electronic DMR (e-DMR) internet application. e-DMR allows permitted facilities to enter, sign, and submit DMRs on the internet. e-DMR information is found on the following web page:

https://epa.ohio.gov/divisions-and-offices/surface-water/permitting/electronic-business-services

B. DMRs shall be signed by a facility's Responsible Official or a Delegated Responsible Official (i.e. a person delegated by the Responsible Official). The Responsible Official of a facility is defined as:

1. For a corporation: by a responsible corporate officer. For the purpose of this section, a responsible corporate officer means: (a) a president, secretary, treasurer, or vice-president of the corporation in charge of a principal business function, or any other person who performs similar policy or decision-making functions for the corporation; or (b) The manager of one or more manufacturing, production or operating facilities, provided the manager is authorized to make management decisions that govern the operation of the regulated facility including having explicit or implicit duty of making major capital investment recommendations, and initiating and directing other comprehensive measures to assure long-term environmental compliance with environmental laws and regulations; the manager can ensure that the necessary systems are established or actions taken to gather complete and accurate information for permit application requirements; and where authority to sign documents has been assigned or delegated to the manager in accordance with corporate procedures.

2. For a partnership or sole proprietorship: by a general partner or the proprietor, respectively; or

3. In the case of a municipal, state or other public facility, by either the principal executive officer, the ranking elected official or other duly authorized employee.

For e-DMR, the person signing and submitting the DMR will need to obtain an eBusiness Center account and Personal Identification Number (PIN). Additionally, Delegated Responsible Officials must be delegated by the Responsible Official, either on-line using the eBusiness Center's delegation function, or on a paper delegation form provided by Ohio EPA. For more information on the PIN and delegation processes, please view the following web page:

https://epa.ohio.gov/divisions-and-offices/surface-water/permitting/electronic-business-services-sub/edmr

C. DMRs submitted using e-DMR shall be submitted to Ohio EPA by the 20th day of the month following the month-of-interest.

D. If the permittee monitors any pollutant at the location(s) designated herein more frequently than required by this permit, using approved analytical methods as specified in Section 5. SAMPLING AND ANALYTICAL METHODS, the results of such monitoring shall be included in the calculation and reporting of the values required in the reports specified above.

E. Analyses of pollutants not required by this permit, except as noted in the preceding paragraph, shall not be reported to the Ohio EPA, but records shall be retained as specified in Section 7. RECORDS RETENTION.

5. SAMPLING AND ANALYTICAL METHOD

Samples and measurements taken as required herein shall be representative of the volume and nature of the monitored flow. Test procedures for the analysis of pollutants shall conform to regulation 40 CFR 136, "Test Procedures For The Analysis of Pollutants" unless other test procedures have been specified in this permit. The permittee shall periodically calibrate and perform maintenance procedures on all monitoring and analytical instrumentation at intervals to ensure accuracy of measurements.

6. RECORDING OF RESULTS

For each measurement or sample taken pursuant to the requirements of this permit, the permittee shall record the following information:

A. The exact place and date of sampling; (time of sampling not required on EPA 4500)

B. The person(s) who performed the sampling or measurements;

C. The date the analyses were performed on those samples;

D. The person(s) who performed the analyses;

E. The analytical techniques or methods used; and

F. The results of all analyses and measurements.

7. RECORDS RETENTION

The permittee shall retain all of the following records for the wastewater treatment works for a minimum of three years except those records that pertain to sewage sludge disposal, use, storage, or treatment, which shall be kept for a minimum of five years, including:

A. All sampling and analytical records (including internal sampling data not reported);

B. All original recordings for any continuous monitoring instrumentation;

C. All instrumentation, calibration and maintenance records;

D. All plant operation and maintenance records;

E. All reports required by this permit; and

F. Records of all data used to complete the application for this permit for a period of at least three years, or five years for sewage sludge, from the date of the sample, measurement, report, or application.

These periods will be extended during the course of any unresolved litigation, or when requested by the Regional Administrator or the Ohio EPA. The three year period, or five year period for sewage sludge, for retention of records shall start from the date of sample, measurement, report, or application.

8. AVAILABILITY OF REPORTS

Except for data determined by the Ohio EPA to be entitled to confidential status, all reports prepared in accordance with the terms of this permit shall be available for public inspection at the appropriate district offices of the Ohio EPA. Both the Clean Water Act and Section 6111.05 Ohio Revised Code state that effluent data and receiving water quality data shall not be considered confidential.

9. DUTY TO PROVIDE INFORMATION

The permittee shall furnish to the Director, within a reasonable time, any information which the Director may request to determine whether cause exists for modifying, revoking, and reissuing, or terminating the permit, or to determine compliance with this permit. The permittee shall also furnish to the Director, upon request, copies of records required to be kept by this permit.

10. RIGHT OF ENTRY

The permittee shall allow the Director or an authorized representative upon presentation of credentials and other documents as may be required by law to:

A. Enter upon the permittee's premises where a regulated facility or activity is located or conducted, or where records must be kept under the conditions of this permit.

B. Have access to and copy, at reasonable times, any records that must be kept under the conditions of the permit.

C. Inspect at reasonable times any facilities, equipment (including monitoring and control equipment), practices, or operations regulated or required under this permit.

D. Sample or monitor at reasonable times, for the purposes of assuring permit compliance or as otherwise authorized by the Clean Water Act, any substances or parameters at any location.

11. UNAUTHORIZED DISCHARGES

A. Bypass Not Exceeding Limitations - The permittee may allow any bypass to occur which does not cause effluent limitations to be exceeded, but only if it also is for essential maintenance to assure efficient operation. These bypasses are not subject to the provisions of paragraphs 11.B and 11.C.

B. Notice

1. Anticipated Bypass - If the permittee knows in advance of the need for a bypass, it shall submit prior notice, if possible at least ten days before the date of the bypass.

2. Unanticipated Bypass - The permittee shall submit notice of an unanticipated bypass as required in paragraph 12.B (24 hour notice).

C. Prohibition of Bypass

1. Bypass is prohibited, and the Director may take enforcement action against a permittee for bypass, unless:

a. Bypass was unavoidable to prevent loss of life, personal injury, or severe property damage;

b. There were no feasible alternatives to the bypass, such as the use of auxiliary treatment facilities, retention of untreated wastes, or maintenance during normal periods of equipment downtime. This condition is not satisfied if adequate back-up equipment should have been installed in the exercise of reasonable engineering judgment to prevent a bypass which occurred during normal periods of equipment downtime or preventive maintenance; and

c. The permittee submitted notices as required under paragraph 11.B.

2. The Director may approve an anticipated bypass, after considering its adverse effects, if the Director determines that it will meet the three conditions listed above in paragraph 11.C.1.

12. NONCOMPLIANCE NOTIFICATION

A. Exceedance of a Daily Maximum Discharge Limit

1. The permittee shall report noncompliance that is the result of any violation of a daily maximum discharge limit for any of the pollutants listed by the Director in the permit by e-mail or telephone within twenty-four (24) hours of discovery.

The permittee may report to the appropriate Ohio EPA district office e-mail account as follows (this method is preferred):

Southeast District Office: sedo24hournpdes@epa.ohio.gov
Southwest District Office: swdo24hournpdes@epa.ohio.gov
Northwest District Office: nwdo24hournpdes@epa.ohio.gov
Northeast District Office: nedo24hournpdes@epa.ohio.gov
Central District Office: cdo24hournpdes@epa.ohio.gov
Central Office: co24hournpdes@epa.ohio.gov

The permittee shall attach a noncompliance report to the e-mail. A noncompliance report form is available on the following web site under the Monitoring and Reporting - Non-Compliance Notification section:

https://epa.ohio.gov/divisions-and-offices/surface-water/permitting/individual-wastewater-discharge-permits

Or, the permittee may report to the appropriate Ohio EPA district office by telephone toll-free between 8:00 AM and 5:00 PM as follows:

Southeast District Office: (800) 686-7330
Southwest District Office: (800) 686-8930
Northwest District Office: (800) 686-6930
Northeast District Office: (800) 686-6330
Central District Office: (800) 686-2330
Central Office: (614) 644-2001

The permittee shall include the following information in the telephone noncompliance report:

a. The name of the permittee, and a contact name and telephone number;

b. The limit(s) that has been exceeded;

c. The extent of the exceedance(s);

d. The cause of the exceedance(s);

e. The period of the exceedance(s) including exact dates and times;

f. If uncorrected, the anticipated time the exceedance(s) is expected to continue; and,

g. Steps taken to reduce, eliminate or prevent occurrence of the exceedance(s).

B. Other Permit Violations

1. The permittee shall report noncompliance that is the result of any unanticipated bypass resulting in an exceedance of any effluent limit in the permit or any upset resulting in an exceedance of any effluent limit in the permit by e-mail or telephone within twenty-four (24) hours of discovery.

The permittee may report to the appropriate Ohio EPA district office e-mail account as follows (this method is preferred):

Southeast District Office: sedo24hournpdes@epa.ohio.gov
Southwest District Office: swdo24hournpdes@epa.ohio.gov
Northwest District Office: nwdo24hournpdes@epa.ohio.gov
Northeast District Office: nedo24hournpdes@epa.ohio.gov
Central District Office: cdo24hournpdes@epa.ohio.gov
Central Office: co24hournpdes@epa.ohio.gov

The permittee shall attach a noncompliance report to the e-mail. A noncompliance report form is available on the following web site under the Monitoring and Reporting - Non-Compliance Notification section:

https://epa.ohio.gov/divisions-and-offices/surface-water/permitting/individual-wastewater-discharge-permits

Or, the permittee may report to the appropriate Ohio EPA district office by telephone toll-free between 8:00 AM and 5:00 PM as follows:

Southeast District Office: (800) 686-7330
Southwest District Office: (800) 686-8930
Northwest District Office: (800) 686-6930
Northeast District Office: (800) 686-6330
Central District Office: (800) 686-2330
Central Office: (614) 644-2001

The permittee shall include the following information in the telephone noncompliance report:

a. The name of the permittee, and a contact name and telephone number;

b. The time(s) at which the discharge occurred, and was discovered;

c. The approximate amount and the characteristics of the discharge;

d. The stream(s) affected by the discharge;

e. The circumstances which created the discharge;

f. The name and telephone number of the person(s) who have knowledge of these circumstances;

g. What remedial steps are being taken; and,

h. The name and telephone number of the person(s) responsible for such remedial steps.

2. The permittee shall report noncompliance that is the result of any spill or discharge which may endanger human health or the environment within thirty (30) minutes of discovery by calling the 24-Hour Emergency Hotline toll-free at (800) 282-9378. The permittee shall also report the spill or discharge by e-mail or telephone within twenty-four (24) hours of discovery in accordance with B.1 above.

C. When the telephone option is used for the noncompliance reports required by A and B, the permittee shall submit to the appropriate Ohio EPA district office a confirmation letter and a completed noncompliance report within five (5) days of the discovery of the noncompliance. This follow up report is not necessary for the e-mail option which already includes a completed noncompliance report.

D. If the permittee is unable to meet any date for achieving an event, as specified in a schedule of compliance in their permit, the permittee shall submit a written report to the appropriate Ohio EPA district office within fourteen (14) days of becoming aware of such a situation. The report shall include the following:

1. The compliance event which has been or will be violated;

2. The cause of the violation;

3. The remedial action being taken;

4. The probable date by which compliance will occur; and,

5. The probability of complying with subsequent and final events as scheduled.

E. The permittee shall report all other instances of permit noncompliance not reported under paragraphs A or B of this section on their monthly DMR submission. The DMR shall contain comments that include the information listed in paragraphs A or B as appropriate.

F. If the permittee becomes aware that it failed to submit an application, or submitted incorrect information in an application or in any report to the director, it shall promptly submit such facts or information.

13. RESERVED

14. DUTY TO MITIGATE

The permittee shall take all reasonable steps to minimize or prevent any discharge in violation of this permit which has a reasonable likelihood of adversely affecting human health or the environment.

15. AUTHORIZED DISCHARGES

All discharges authorized herein shall be consistent with the terms and conditions of this permit. The discharge of any pollutant identified in this permit more frequently than, or at a level in excess of, that authorized by this permit shall constitute a violation of the terms and conditions of this permit. Such violations may result in the imposition of civil and/or criminal penalties as provided for in Section 309 of the Act and Ohio Revised Code Sections 6111.09 and 6111.99.

16. DISCHARGE CHANGES

The following changes must be reported to the appropriate Ohio EPA district office as soon as practicable:

A. For all treatment works, any significant change in character of the discharge which the permittee knows or has reason to believe has occurred or will occur which would constitute cause for modification or revocation and reissuance. The permittee shall give advance notice to the Director of any planned changes in the permitted facility or activity which may result in noncompliance with permit requirements. Notification of permit changes or anticipated noncompliance does not stay any permit condition.

B. For publicly owned treatment works:

1. Any proposed plant modification, addition, and/or expansion that will change the capacity or efficiency of the plant;

2. The addition of any new significant industrial discharge; and

3. Changes in the quantity or quality of the wastes from existing tributary industrial discharges which will result in significant new or increased discharges of pollutants.

C. For non-publicly owned treatment works, any proposed facility expansions, production increases, or process modifications, which will result in new, different, or increased discharges of pollutants.

Following this notice, modifications to the permit may be made to reflect any necessary changes in permit conditions, including any necessary effluent limitations for any pollutants not identified and limited herein. A determination will also be made as to whether a National Environmental Policy Act (NEPA) review will be required. Sections 6111.44 and 6111.45, Ohio Revised Code, require that plans for treatment works or improvements to such works be approved by the Director of the Ohio EPA prior to initiation of construction.

D. In addition to the reporting requirements under 40 CFR 122.41(l) and per 40 CFR 122.42(a), all existing manufacturing, commercial, mining, and silvicultural dischargers must notify the Director as soon as they know or have reason to believe:

1. That any activity has occurred or will occur which would result in the discharge on a routine or frequent basis of any toxic pollutant which is not limited in the permit. If that discharge will exceed the highest of the "notification levels" specified in 40 CFR Sections 122.42(a)(1)(i) through 122.42(a)(1)(iv).

2. That any activity has occurred or will occur which would result in any discharge, on a non-routine or infrequent basis, of a toxic pollutant which is not limited in the permit, if that discharge will exceed the highest of the "notification levels" specified in 122.42(a)(2)(i) through 122.42(a)(2)(iv).

17. TOXIC POLLUTANTS

The permittee shall comply with effluent standards or prohibitions established under Section 307 (a) of the Clean Water Act for toxic pollutants within the time provided in the regulations that establish these standards or prohibitions, even if the permit has not yet been modified to incorporate the requirement. Following establishment of such standards or prohibitions, the Director shall modify this permit and so notify the permittee.

18. PERMIT MODIFICATION OR REVOCATION

A. After notice and opportunity for a hearing, this permit may be modified or revoked, by the Ohio EPA, in whole or in part during its term for cause including, but not limited to, the following:

1. Violation of any terms or conditions of this permit;

2. Obtaining this permit by misrepresentation or failure to disclose fully all relevant facts; or

3. Change in any condition that requires either a temporary or permanent reduction or elimination of the permitted discharge.

B. Pursuant to rule 3745-33-04, Ohio Administrative Code, the permittee may at any time apply to the Ohio EPA for modification of any part of this permit. The filing of a request by the permittee for a permit modification or revocation does not stay any permit condition. The application for modification should be received by the appropriate Ohio EPA district office at least ninety days before the date on which it is desired that the modification become effective. The application shall be made only on forms approved by the Ohio EPA.

19. TRANSFER OF OWNERSHIP OR CONTROL

This permit may be transferred or assigned and a new owner or successor can be authorized to discharge from this facility, provided the following requirements are met:

A. The permittee shall notify the succeeding owner or successor of the existence of this permit by a letter, a copy of which shall be forwarded to the appropriate Ohio EPA district office. The copy of that letter will serve as the permittee's notice to the Director of the proposed transfer. The copy of that letter shall be received by the appropriate Ohio EPA district office sixty (60) days prior to the proposed date of transfer;

B. A written agreement containing a specific date for transfer of permit responsibility and coverage between the current and new permittee (including acknowledgement that the existing permittee is liable for violations up to that date, and that the new permittee is liable for violations from that date on) shall be submitted to the appropriate Ohio EPA district office within sixty days after receipt by the district office of the copy of the letter from the permittee to the succeeding owner;

At any time during the sixty (60) day period between notification of the proposed transfer and the effective date of the transfer, the Director may prevent the transfer if he concludes that such transfer will jeopardize compliance with the terms and conditions of the permit. If the Director does not prevent transfer, he will modify the permit to reflect the new owner.

20. OIL AND HAZARDOUS SUBSTANCE LIABILITY

Nothing in this permit shall be construed to preclude the institution of any legal action or relieve the permittee from any responsibilities, liabilities, or penalties to which the permittee is or may be subject under Section 311 of the Clean Water Act.

21. SOLIDS DISPOSAL

Collected grit and screenings, and other solids other than sewage sludge, shall be disposed of in such a manner as to prevent entry of those wastes into waters of the state, and in accordance with all applicable laws and rules.

22. CONSTRUCTION AFFECTING NAVIGABLE WATERS

This permit does not authorize or approve the construction of any onshore or offshore physical structures or facilities or the undertaking of any work in any navigable waters.

23. CIVIL AND CRIMINAL LIABILITY

Except as exempted in the permit conditions on UNAUTHORIZED DISCHARGES or UPSETS, nothing in this permit shall be construed to relieve the permittee from civil or criminal penalties for noncompliance.

24. STATE LAWS AND REGULATIONS

Nothing in this permit shall be construed to preclude the institution of any legal action or relieve the permittee from any responsibilities, liabilities, or penalties established pursuant to any applicable state law or regulation under authority preserved by Section 510 of the Clean Water Act.

25. PROPERTY RIGHTS

The issuance of this permit does not convey any property rights in either real or personal property, or any exclusive privileges, nor does it authorize any injury to private property or any invasion of personal rights, nor any infringement of federal, state, or local laws or regulations.

26. UPSET

The provisions of 40 CFR Section 122.41(n), relating to "Upset," are specifically incorporated herein by reference in their entirety. For definition of "upset," see Part III, Paragraph 1, DEFINITIONS.

27. SEVERABILITY

The provisions of this permit are severable, and if any provision of this permit, or the application of any provision of this permit to any circumstance, is held invalid, the application of such provision to other circumstances, and the remainder of this permit, shall not be affected thereby.

28. SIGNATORY REQUIREMENTS

All applications submitted to the Director shall be signed and certified in accordance with the requirements of 40 CFR 122.22.

All reports submitted to the Director shall be signed and certified in accordance with the requirements of 40 CFR Section 122.22.

29. OTHER INFORMATION

A. Where the permittee becomes aware that it failed to submit any relevant facts in a permit application or submitted incorrect information in a permit application or in any report to the Director, it shall promptly submit such facts or information.

B. ORC 6111.99 provides that any person who falsifies, tampers with, or knowingly renders inaccurate any monitoring device or method required to be maintained under this permit shall, upon conviction, be punished by a fine of not more than $25,000 per violation.

C. ORC 6111.99 states that any person who knowingly makes any false statement, representation, or certification in any record or other document submitted or required to be maintained under this permit including monitoring reports or reports of compliance or noncompliance shall, upon conviction, be punished by a fine of not more than $25,000 per violation.

D. ORC 6111.99 provides that any person who violates Sections 6111.04, 6111.042, 6111.05, or division (A) of Section 6111.07 of the Revised Code shall be fined not more than $25,000 or imprisoned not more than one year, or both.

30. NEED TO HALT OR REDUCE ACTIVITY

40 CFR 122.41(c) states that it shall not be a defense for a permittee in an enforcement action that it would have been necessary to halt or reduce the permitted activity in order to maintain compliance with conditions of this permit.

31. APPLICABLE FEDERAL RULES

All references to 40 CFR in this permit mean the version of 40 CFR which is effective as of the effective date of this permit.

32. AVAILABILITY OF PUBLIC SEWERS

Notwithstanding the issuance or non-issuance of an NPDES permit to a semi-public disposal system, whenever the sewage system of a publicly owned treatment works becomes available and accessible, the permittee operating any semi-public disposal system shall abandon the semi-public disposal system and connect it into the publicly owned treatment works.

PART IV. STORMWATER CONTROL MEASURES AND POLLUTION PREVENTION PROGRAMS

In Part IV and in Part VI, the term "minimize" means reduce and/or eliminate to the extent achievable using control measures (including best management practices) that are technologically available and economically practicable and achievable in light of best industry practice.

A. Control Measures

You shall select, design, install, and implement control measures (including best management practices) to address the selection and design considerations in Part IV.B, and meet the control measures/best management practices in Part IV.C and any applicable numeric effluent limits in Part I. The selection, design, installation, and implementation of these control measures shall be in accordance with good engineering practices and manufacturer's specifications. Note that you may deviate from such manufacturer's specifications where you provide justification for such deviation and include documentation of your rationale in the part of your SWPPP that describes your control measures, consistent with Part IV.J.3. If you find that your control measures are not achieving their intended effect of minimizing pollutant discharges, you shall modify these control measures as expeditiously as practicable. Regulated stormwater discharges from your facility include stormwater run-on that commingles with stormwater discharges associated with industrial activity at your facility.

B. Control Measure Selection and Design Considerations

You shall consider the following when selecting and designing control measures:

1. Preventing stormwater from coming into contact with polluting materials is generally more effective, and less costly, than trying to remove pollutants from stormwater

2. Using control measures in combination is more effective than using control measures in isolation for minimizing pollutants in your stormwater discharge;

3. Assessing the type and quantity of pollutants, including their potential to impact receiving water quality, is critical to designing effective control measures that will achieve the limits in this permit;

4. Minimizing impervious areas at your facility and infiltrating runoff onsite (including bioretention cells, green roofs, and pervious pavement, among other approaches) can reduce runoff and improve groundwater recharge and stream base flows in local streams, although care shall be taken to avoid ground water contamination;

5. Attenuating flow using open vegetated swales and natural depressions can reduce in-stream impacts of erosive flows;

6. Conserving and/or restoring of riparian buffers will help protect streams from stormwater runoff and improve water quality; and

7. Using treatment interceptors (e.g., swirl separators and sand filters) may be appropriate in some instances to minimize the discharge of pollutants.

C. Control Measures/Best Management Practices (BMPs)

1. <u>Minimize Exposure</u>- You shall minimize the exposure of manufacturing, processing, and material storage areas (including loading and unloading, storage, disposal, cleaning, maintenance, and fueling

operations) to rain, snow, snowmelt, and runoff by either locating these industrial materials and activities inside or protecting them with storm resistant coverings (although significant enlargement of impervious surface area is not recommended). In minimizing exposure, you should pay particular attention to the following:

a. Use grading, berming, or curbing to prevent runoff of contaminated flows and divert run-on away from these areas;

b. Locate materials, equipment, and activities so that leaks are contained in existing containment and diversion systems (confine the storage of leaky or leak-prone vehicles and equipment awaiting maintenance to protected areas);

c. Clean up spills and leaks promptly using dry methods (e.g., absorbents) to prevent the discharge of pollutants;

d. Use drip pans and absorbents under or around leaky vehicles and equipment or store indoors where feasible;

e. Use spill/overflow protection equipment;

f. Drain fluids from equipment and vehicles prior to on-site storage or disposal;

g. Perform all cleaning operations indoors, under cover, or in bermed areas that prevent runoff and run-on and also that capture any overspray; and

h. Ensure that all washwater drains to a proper collection system (i.e., not the stormwater drainage system).

If the discharge of vehicle and equipment washwater is not authorized under Part I of this permit, these wastewaters must be discharged to sanitary sewer in accordance with applicable industrial pretreatment requirements or disposed of otherwise in accordance with applicable law.

[Note: Industrial materials do not need to be enclosed or covered if stormwater runoff from affected areas will not be discharged to receiving waters or if discharges are authorized under Part I of this permit.]

2. Good Housekeeping- You shall keep clean all exposed areas that are potential sources of pollutants, using such measures as sweeping at regular intervals, keeping materials orderly and labeled, and storing materials in appropriate containers.

3. Maintenance - You shall regularly inspect, test, maintain, and repair all industrial equipment and systems to avoid situations that may result in leaks, spills, and other releases of pollutants in stormwater discharged to receiving waters. You shall maintain all control measures that are used to achieve the control measures/best management practices (BMPs) required by this permit in effective operating condition. Nonstructural control measures shall also be diligently maintained (e.g., spill response supplies available, personnel appropriately trained). If you find that your control measures need to be replaced or repaired, you shall make the necessary repairs or modifications as expeditiously as practicable.

4. Spill Prevention and Response Procedures- You shall minimize the potential for leaks, spills and other releases that may be exposed to stormwater and develop plans for effective response to such spills if or when they occur. At a minimum, you shall implement:

a. Procedures for plainly labeling containers (e.g., "Used Oil", "Spent Solvents", "Fertilizers and Pesticides", etc.) that could be susceptible to spillage or leakage to encourage proper handling and facilitate rapid response if spills or leaks occur;

b. Preventative measures such as barriers between material storage and traffic areas, secondary containment provisions, and procedures for material storage and handling;

c. Procedures for expeditiously stopping, containing, and cleaning up leaks, spills, and other releases. Employees who may cause, detect, or respond to a spill or leak shall be trained in these procedures and have necessary spill response equipment available. If possible, one of these individuals should be a member of your stormwater pollution prevention team (Part IV.J.1); and

d. Procedures for notification of appropriate facility personnel, emergency response agencies, and regulatory agencies. Where a leak, spill or other release containing a hazardous substance or oil in an amount equal to or in excess of a reportable quantity established under either 40 CFR Part 110, 40 CFR Part 117, or 40 CFR Part 302, occurs during a 24-hour period, you shall notify the Ohio EPA in accordance with the requirements of Part III Item 12 of this permit as soon as you have knowledge of the discharge. Contact information shall be in locations that are readily accessible and available.

5. Erosion and Sediment Controls- You shall stabilize exposed areas and contain runoff using structural and/or non-structural control measures to minimize onsite erosion and sedimentation, and the resulting discharge of pollutants. Among other actions you shall take to meet this limit, you shall place flow velocity dissipation devices at discharge locations and within outfall channels where necessary to reduce erosion and/or settle out pollutants. In selecting, designing, installing, and implementing appropriate control measures, you are encouraged to consult with the current edition of Ohio's Rainwater and Land Development manual (https://epa.ohio.gov/divisions-and-offices/surface-water/guides-manuals/rainwater-and-land-development), U.S. EPA's internet-based resources relating to BMPs for erosion and sedimentation, including the sector-specific Industrial Storm Water Fact Sheet Series, (https://www.epa.gov/npdes/stormwater-discharges-industrial-activities-fact-sheets-and-guidance), National Menu of Storm Water BMPs (https://www.epa.gov/npdes/national-menu-best-management-practices-bmps-stormwater), and National Management Measures to Control Nonpoint Source Pollution from Urban Areas(https://www.epa.gov/nps/urban-runoff-national-management-measures).

6. Management of Runoff- You shall divert, infiltrate, reuse, contain, or otherwise reduce stormwater runoff, to minimize pollutants in your discharges. In selecting, designing, installing, and implementing appropriate control measures, you are encouraged to consult with the current edition of Ohio's Rainwater and Land Development manual (https://epa.ohio.gov/divisions-and-offices/surface-water/guides-manuals/rainwater-and-land-development), U.S. EPA's internet-based resources relating to runoff management, including the sector-specific Industrial Storm Water Fact Sheet Series, (https://www.epa.gov/npdes/stormwater-discharges-industrial-activities-fact-sheets-and-guidance), National Menu of Storm Water BMPs (https://www.epa.gov/npdes/national-menu-best-management-practices-bmps-stormwater), and National Management Measures to Control Nonpoint Source Pollution from Urban Areas (https://www.epa.gov/nps/urban-runoff-national-management-measures).

7. Salt Storage Piles or Piles Containing Salt- You shall enclose or cover storage piles of salt, or piles containing salt, used for deicing or other commercial or industrial purposes, including maintenance of paved surfaces. You shall implement appropriate measures (e.g., good housekeeping, diversions, containment) to minimize exposure resulting from adding to or removing materials from the pile.

8. Sector Specific Control Measures/Best Management Practices (BMPs)- You shall achieve any additional control measures/best management practices (BMPs) stipulated in the relevant sector-specific

section(s) of Part IV.K. of this permit.

9. Employee Training- You shall train all employees who work in areas where industrial materials or activities are exposed to stormwater, or who are responsible for implementing activities necessary to meet the conditions of this permit (e.g., inspectors, maintenance personnel), including all members of your Pollution Prevention Team. Training shall cover both the specific control measures used to achieve the conditions in this Part, and monitoring, inspection, planning, reporting, and documentation requirements in other parts of this permit. Ohio EPA requires that training be conducted at least annually (or more often if employee turnover is high).

10. Non-Stormwater Discharges- You shall eliminate non-stormwater discharges not authorized in Part I and Part II of this NPDES permit. The following are additional non-stormwater discharges authorized under this permit:

a. Discharges from fire-fighting activities (not planned exercises);

b. Fire hydrant flushings;

c. Potable water, including water line flushings;

d. Uncontaminated condensate from air conditioners, coolers/chillers, and other compressors and from the outside storage of refrigerated gases or liquids;

e. Irrigation drainage;

f. Landscape watering provided all pesticides, herbicides, and fertilizer have been applied in accordance with the approved labeling;

g. Pavement wash waters where no detergents or hazardous cleaning products are used (e.g., bleach, hydrofluoric acid, muriatic acid, sodium hydroxide, nonylphenols, etc.), and the wash waters do not come into contact with oil and grease deposits, sources of pollutants associated with industrial activities (see Part IV.J.2), or any other toxic or hazardous materials, unless residues are first cleaned up using dry clean-up methods (e.g., applying absorbent materials and sweeping, using hydrophobic mops/rags) and you have implemented appropriate control measures to minimize discharges of mobilized solids and other pollutants (e.g., filtration, detention, settlement);

h. Routine external building washdown/power wash water that does not use detergents or hazardous cleaning products (e.g., those containing bleach, hydrofluoric acid, muriatic acid, sodium hydroxide, nonylphenols, etc.);

i. Uncontaminated groundwater or spring water

j. Foundation or footing drains where flows are not contaminated with process materials;

k. Incidental windblown mist from cooling towers that collect on rooftops or adjacent portions of your facility, but not intentional discharges from the cooling tower (e.g., "piped" cooling tower blowdowns or drains)

11.Waste, Garbage and Floatable Debris - You shall ensure that waste, garbage, and floatable debris are not discharged to receiving waters by keeping exposed areas free of such materials or by intercepting them before they are discharged.

12. Dust Generation and Vehicle Tracking of Industrial Materials- You shall minimize generation of dust and off-site tracking of raw, final, or waste materials.

D. Corrective Actions

1. Conditions Requiring Review and Revision to Eliminate Problem- If any of the following conditions occur, you shall review and revise the selection, design, installation, and implementation of your control measures to ensure that the condition is eliminated and will not be repeated in the future:

a. An unauthorized release or discharge (e.g., spill, leak, or discharge of non-stormwater not authorized by this or another NPDES permit) occurs at your facility;

b. A discharge violates a numeric effluent limit;

c. You become aware, or Ohio EPA determines, that your control measures are not stringent enough for the discharge to meet applicable water quality standards;

d. An inspection or evaluation of your facility by an Ohio EPA official or local MS4 operator determines that modifications to the control measures are necessary to meet the control measures/best management practices (BMPs) in this permit; or

e. You find in your routine facility inspection or quarterly visual assessment that your control measures are not being properly operated and maintained.

2. Conditions Requiring Review to Determine if Modifications Are Necessary- If construction or a change in design, operation, or maintenance at your facility significantly changes the nature of pollutants discharged in stormwater from your facility, or significantly increases the quantity of pollutants discharged, you shall review the selection, design, installation, and implementation of your control measures to determine if modifications are necessary to meet the Part IV.A conditions in this permit:

3. Corrective Action Deadlines- You shall document your discovery of any of the conditions listed in Part IV.D.1 and Part IV.D.2 within 24 hours of making such discovery. Subsequently, within 30 days of such discovery, you shall document any corrective action(s) to be taken to eliminate or further investigate the deficiency, or if no corrective action is needed, the basis for that determination. Specific documentation required within 24 hours and 30 days is detailed in Part IV.D.4. If you determine that changes are necessary following your review, any modifications to your control measures shall be made before the next storm event if possible, or as soon as practicable following that storm event. These time intervals are not grace periods, but are schedules considered reasonable for documenting your findings and for making repairs and improvements. They are included in this permit to ensure that the conditions prompting the need for these repairs and improvements are not allowed to persist indefinitely.

4. Corrective Action Report- Within 24 hours of discovery of any condition listed in Part IV.D.1 and Part IV.D.2, you shall document the following information:

a. Identification of the condition triggering the need for corrective action review;
b. Description of the problem identified; and
c. Date the problem was identified.

Within 30 days of discovery of any condition listed in Part IV.D.1 and Part IV.D.2, you shall document the following information and submit the report to the appropriate Ohio EPA District Office):

a. Summary of corrective action taken or to be taken (or, for triggering events identified in Part IV.D.2 where you determine that corrective action is not necessary, the basis for this determination);

b. Notice of whether SWPPP modifications are required as a result of this discovery or corrective action;

c. Date corrective action initiated; and

d. Date corrective action completed or expected to be completed.

In addition to your corrective action report, you shall also include this documentation in an annual report as required in Part V. A.2 and retain onsite with your SWPPP.

5. Effect of Corrective Action- If the event triggering the review is a permit violation (e.g., non-compliance with an effluent limit), correcting it does not remove the original violation. Additionally, failing to take corrective action in accordance with this section is an additional permit violation. Ohio EPA will consider the appropriateness and promptness of corrective action in determining enforcement responses to permit violations.

6. Substantially Identical Outfalls- If the event triggering corrective action is linked to an outfall that represents other substantially identical outfalls, your review shall assess the need for corrective action for each outfall represented by the outfall that triggered the review. Any necessary changes to control measures that affect these other outfalls shall also be made before the next storm event if possible, or as soon as practicable following that storm event.

E. Inspections

Beginning on the effective date of this permit, you shall conduct the inspections in Part IV.E.1 and Part IV.E.2 at your facility.

1. Routine Facility Inspections

a. *Routine Facility Inspection Procedure*- Conduct routine facility inspections of all areas of the facility where industrial materials or activities are exposed to stormwater, and of all stormwater control measures used to comply with Part IV. Items A-C conditions contained in this permit. Routine facility inspections shall be conducted at least quarterly (i.e., once each calendar quarter) although in many instances, more frequent inspection (e.g., monthly) may be appropriate for some types of equipment, processes, and control measures or areas of the facility with significant activities and materials exposed to stormwater. Perform these inspections during periods when the facility is in operation. You shall specify the relevant inspection schedules in your SWPPP document as required in Part IV. Items A-C. These routine inspections shall be performed by qualified personnel (for definition see VI - Definitions) with at least one member of your stormwater pollution prevention team participating. At least once each calendar year, the routine facility inspection shall be conducted during a period when a stormwater discharge is occurring.

b. *Routine Facility Inspection Documentation*- You shall document the findings of each routine facility inspection performed and maintain this documentation onsite with your SWPPP. You are not required to submit your routine facility inspection findings to Ohio EPA, unless specifically requested to do so. At a minimum, your documentation of each routine facility inspection shall include:

i. The inspection date and time;
ii. The name(s) and signature(s) of the inspector(s);

iii. Weather information and a description of any discharges occurring at the time of the inspection;
iv. Any previously unidentified discharges of pollutants from the site;
v. Any control measures needing maintenance or repairs;
vi. Any failed control measures that need replacement;
vii. Any incidents of noncompliance observed; and
viii. Any additional control measures needed to comply with the permit requirements.

Any corrective action required as a result of a routine facility inspection shall be performed consistent with Part IV.D of this permit.

c. *Exceptions to Routine Facility Inspections:*

i. *Inactive and Unstaffed Sites*- The requirement to conduct routine facility inspections on a quarterly basis does not apply at a facility that is inactive and unstaffed, as long as there are no industrial materials or activities exposed to stormwater. Such a facility is only required to conduct an annual site inspection in accordance with the requirements of Part IV.E.1. To invoke this exception, you shall maintain a statement in your SWPPP pursuant to Part IV.F indicating that the site is inactive and unstaffed, and that there are no industrial materials or activities exposed to precipitation, in accordance with the substantive requirements in 40 CFR 122.26(g)(4)(iii). The statement shall be signed and certified in accordance with Part III.28. If circumstances change and industrial materials or activities become exposed to stormwater or your facility becomes active and/or staffed, this exception no longer applies and you shall immediately resume quarterly facility inspections. If you are not qualified for this exception at the time you are authorized under this permit, but during the permit term you become qualified because your facility is inactive and unstaffed, and there are no industrial materials or activities that are exposed to stormwater, then you shall include the same signed and certified statement as above and retain it with your records.

ii. *Ohio EPA's Encouraging Environmental Excellence (E3) Program*- If your facility has been recognized under the Gold and Platinum levels by Ohio EPA's Encouraging Environmental Excellence (E3) Program, you only need to conduct routine facility inspections for two quarters each year. If Part IV.K of this permit requires your facility to conduct routine facility inspections on a monthly basis, you only need to conduct routine facility inspections on a quarterly basis.

2. Quarterly Visual Assessment of Stormwater Discharges

a. *Quarterly Visual Assessment Procedures*- Once each calendar quarter for the entire permit term you shall collect a stormwater sample from ***Outfall(s) [List stormwater outfalls which need visual assessments]***and conduct a visual assessment of each of these samples. These samples are not required to be collected consistent with 40 CFR Part 136 procedures but should be collected in such a manner that the samples are representative of the stormwater discharge. The visual assessment shall be made:

i. Of a sample in a clean, clear glass, or plastic container, and examined in a well-lit area;

ii. On samples collected within the first 30 minutes of an actual discharge from a storm event. If it is not possible to collect the sample within the first 30 minutes of discharge, the sample shall be collected as soon as practicable after the first 30 minutes and you shall document why it was not possible to take samples within the first 30 minutes. In the case of snowmelt, samples shall be taken during a period with a measurable discharge from your site; and

iii. For storm events, on discharges that occur at least 72 hours (3 days) from the previous discharge. The 72-hour (3-day) storm interval does not apply if you document that less than a 72-hour (3-day) interval is representative for local storm events during the sampling period. If it is not possible to collect the sample

on discharges that occur at least 72 hours (3 days) from the previous discharge, the sample shall be collected as close to this storm interval as practicable and you shall document why it was not possible to take samples from a 72 hour (3 day) storm interval.

iv. Areas Subject to Snow: In areas subject to snow, at least one quarterly visual assessment shall capture snowmelt discharge.

v. For the following water quality characteristics: color, odor, clarity, floating solids, settled solids, suspended solids, foam, oil sheen, and other obvious indicators of stormwater pollution.

b. *Quarterly Visual Assessment Documentation*- You shall document the results of your visual assessments and maintain this documentation onsite with your SWPPP. You are not required to submit your visual assessment findings to Ohio EPA, unless specifically requested to do so. At a minimum, your documentation of the visual assessment shall include:

i. Sample location(s)
ii. Sample collection date and time, and visual assessment date and time for each sample;
iii. Personnel collecting the sample and performing visual assessment, and their signatures;
iv. Nature of the discharge (i.e., runoff or snowmelt);
v. Results of observations of the stormwater discharge;
vi. Probable sources of any observed stormwater contamination; and
vii. If applicable, why it was not possible to take samples within the first 30 minutes and/or from a 72 hour (3 day) storm interval.

Any corrective action required as a result of a quarterly visual assessment shall be performed consistent with Part IV.D of this permit.

c. *Exceptions to Quarterly Visual Assessments*

The following are exceptions to quarterly visual assessments:

i. *Adverse Weather Condition*- When adverse weather conditions prevent the collection of samples during the quarter, you shall take a substitute sample during the next qualifying storm event. Documentation of the rationale for no visual assessment for the quarter shall be included with your SWPPP records. Adverse conditions are those that are dangerous or create inaccessibility for personnel, such as local flooding, high winds, or electrical storms, or situations that otherwise make sampling impractical, such as drought or extended frozen conditions.

ii. *Areas Subject to Snow* - In areas subject to snow, at least one quarterly visual assessment shall capture snowmelt discharge, as described in Part IV.E.2.

iii. *Substantially Identical Outfalls* - If your facility has two or more outfalls that you believe discharge substantially identical effluents, as documented in your SWPPP, you may conduct quarterly visual assessments of the discharge at just one of the outfalls and report that the results also apply to the substantially identical outfall(s) provided that you perform visual assessments on a rotating basis of each substantially identical outfall throughout the period of your coverage under this permit. If stormwater contamination is identified through visual assessment performed at a substantially identical outfall, you shall assess and modify your control measures as appropriate for each outfall represented by the monitored outfall.

iv. *Inactive and Unstaffed Sites* - The requirement for a quarterly visual assessment does not apply at a

facility that is inactive and unstaffed, as long as there are no industrial materials or activities exposed to stormwater. To invoke this exception, you shall maintain a statement in your SWPPP indicating that the site is inactive and unstaffed, and that there are no industrial materials or activities exposed to precipitation, in accordance with the substantive requirements in 40 CFR 122.26(g)(4)(iii). The statement shall be signed and certified in accordance with Part III.28 of this permit. If circumstances change and industrial materials or activities become exposed to stormwater or your facility becomes active and/or staffed, this exception no longer applies and you shall immediately resume quarterly visual assessments. If you are not qualified for this exception at the time you are authorized under this permit, but during the permit term you become qualified because your facility is inactive and unstaffed, and there are no industrial materials or activities that are exposed to stormwater, then you shall include the same signed and certified statement as above and retain it with your records.

v. *Ohio EPA's Encouraging Environmental Excellence (E3) Program*- If your facility has been recognized under the Gold and Platinum levels by Ohio EPA's Encouraging Environmental Excellence (E3) Program, you only need to conduct quarterly visual assessment of stormwater discharges for two quarters each year.

F. Storm Water Pollution Prevention Plan (SWPPP)

A stormwater pollution prevention plan (SWPPP) shall be developed to address each outfall that discharges to waters of the state that contains stormwater associated with industrial activity. Stormwater pollution prevention plans shall be prepared in accordance with good engineering practices. The SWPPP shall identify potential sources of pollution which may reasonably be expected to affect the quality of stormwater discharges associated with industrial activity from the facility. The SWPPP shall describe and ensure the implementation of practices which are to be used to reduce the pollutants in stormwater discharges associated with industrial activity at the facility and to assure compliance with the terms and conditions of this permit. Facilities must implement the provisions of the stormwater pollution prevention plan required under this part as a condition of this permit.

The SWPPP does not contain effluent limitations; the limitations or benchmarks are contained in Part I. The SWPPP is intended to document the selection, design, and installation of control measures. As distinct from the SWPPP, the documentation requirements are intended to document the implementation (including inspection, maintenance, monitoring, and corrective action) of the permit requirements.

G. Deadline to Update the SWPPP

1. The permittee shall continue to implement and be in compliance with the SWPPP required by the previous permit. Within six months of the effective date of this permit, the permittee shall update the SWPPP as necessary to address any new or reviewed requirements of this permit.

[OR G. Deadlines for SWPPP Preparation and Compliance]

1. The plan for a stormwater discharge associated with industrial activity:

a. Shall be prepared within six months of the effective date of this permit (and updated based on facility or materials handling changes as specified in Part IV, Item I);

b. Shall provide for implementation and compliance with the terms of the plan within twelve months of the effective date of this permit.

Upon showing of good cause, the Director may establish a later date for preparing and compliance

with a plan for a stormwater discharge associated with industrial activity.]

H. Signature Requirements and SWPPP Availability

1. Your plan shall be signed and dated in accordance with Part III, Item 28, and be retained on-site at the facility which generates the stormwater discharge.

2. You shall retain a copy of the current SWPPP required by this permit at the facility, and it shall be immediately available to Ohio EPA; a local agency approving stormwater management plans; and the operator of an MS4 receiving discharges from the site. Ohio EPA may provide access to portions of your SWPPP to a member of the public upon request. Confidential Business Information (CBI) may be withheld from the public, but may not be withheld from those staff cleared for CBI review within Ohio EPA. Your current SWPPP or certain information from your current SWPPP shall be made available to the public, except any confidential business information (CBI) or restricted information, but you shall clearly identify those portions of the SWPPP that are being withheld from public access. See 40 CFR Part 2 for relevant definitions of CBI:

https://www.govinfo.gov/content/pkg/CFR-2013-title40-vol1/pdf/CFR-2013-title40-vol1-part2-subpartB.pdf

3. All stormwater pollution prevention plans required under this permit are considered reports that shall be available to the public under Section 308(b) of the Act. Confidential Business Information (CBI) may be withheld from the public, but may not be withheld from those staff cleared for CBI review within Ohio EPA. An interested party wishing a copy of a discharger's SWPPP will have to contact the Ohio EPA to obtain a copy.

I. Required SWPPP Modifications

The permittee shall modify your SWPPP whenever necessary to address any of the triggering conditions for corrective action in Part IV.D and to ensure that they do not reoccur, or to reflect changes implemented when a review following the triggering conditions in Part IV.D.2 indicates that changes to your control measures are necessary to meet the control measures/best management practices (BMPs) in this permit. Changes to your SWPPP document shall be made in accordance with the corrective action deadlines in Part IV.D.3 and Part IV.D.4.

The Director may notify the permittee at any time that the plan does not meet one or more of the minimum requirements of this Part. Within 30 days of such notification from the Director, the permittee shall make the required changes to the plan and shall submit to the Director a written certification that the requested changes have been made.

J. Contents of SWPPP

The plan shall include, at a minimum, the following items:

1. Stormwater Pollution Prevention Team

You shall identify the staff members (by name or title) that comprise the facility's stormwater pollution prevention team as well as their individual responsibilities. Your stormwater pollution prevention team is responsible for assisting the facility manager in developing and revising the facility's SWPPP as well as maintaining control measures and taking corrective actions where required. Each member of the stormwater pollution prevention team shall have ready access to either an electronic or paper copy of

applicable portions of this permit and your SWPPP.

2. Site Description

Your SWPPP shall include the following:

a. *Activities at the Facility*- Provide a description of the nature of the industrial activities at your facility;

b. *General location map*. - Provide a general location map (e.g. U.S. Geologic Survey (USGS) quadrangle map) with enough detail to identify the location of your facility and all receiving waters for your stormwater discharges.

c. *Site map*- Provide a site map showing:

-The size of the property in acres;
-The location and extent of significant structures and impervious surfaces;
-Directions of stormwater flow (use arrows);
-Locations of all existing structural control measures;
-Locations of all receiving waters in the immediate vicinity of your facility;
-Locations of all stormwater conveyances including ditches, pipes and swales;
-Locations of potential pollutant sources identified under Part IV J. 2.b;
-Locations where significant spills or leaks identified under Part IV J. 2.b. have occurred;
-Locations of all stormwater monitoring points;
-Locations of stormwater inlets and outfalls, with a unique identification code for each outfall (e.g. Outfall 001, Outfall 002, etc), indicating any outfalls that are considered substantially identical to another outfall, and an approximate outline of the areas draining to each outfall;
-Municipal separate storm sewer systems, where your stormwater discharges to them;
-Locations and descriptions of all non-stormwater discharges identified under Part IV. C. 10;
-Locations of the following activities where such activities are exposed to precipitation:

---Fueling stations;
---Vehicle and equipment maintenance and/or cleaning areas;
---Loading/unloading areas;
---Locations used for the treatment, storage, or disposal of wastes;
---Liquid storage tanks;
---Processing and storage areas;
---Immediate access roads and rail lines used or traveled by carriers of raw materials, manufactured products, waste material, or by-products used or created by the facility;
---Transfer areas for substances in bulk;
---Machinery; and
--- Locations and sources of run-on to your site from adjacent property that contains significant quantities of pollutants.

3. Summary of Potential Pollutant Sources

You shall document at your facility where industrial materials or activities are exposed to stormwater and from which allowable non-stormwater discharges are released. Industrial materials or activities, include, but are not limited to: material handling equipment or activities; industrial machinery; raw materials; industrial production and processes; and intermediate products, by-products, final product or waste product. Material handling activities include, but are not limited to: the storage, loading and unloading, transportation, disposal, or conveyance of any raw material, intermediate product, final product or waste

product. For each area identified, the description shall include, at a minimum:

a. *Activities in the Area*-This includes a list of industrial activities exposed to stormwater (e.g., material storage; equipment fueling, maintenance, and cleaning; cutting steel beams).

b. *Pollutants*- A list of the pollutant(s) or pollutant constituents (e.g, crankcase oil, zinc, sulfuric acid, and cleaning solvents) associated with each identified activity. The pollutant list shall include all significant materials that have been handled, treated, stored, or disposed, and that have been exposed to stormwater in the three years prior to the date you prepare or amend your SWPPP.

c. *Spills and Leaks*- You shall document where potential spills and leaks could occur that could contribute pollutants to stormwater discharges, and the corresponding outfall(s) that would be affected by such spills and leaks. You shall document all significant spills and leaks of oil or toxic or hazardous pollutants that actually occurred at exposed areas, or that drained to a stormwater conveyance, in the three years prior to the date you prepare or amend your SWPPP.

[Note: Significant spills and leaks include, but are not limited to, releases of oil or hazardous substances in excess of quantities that are reportable under CWA Section 311 (see 40 CFR 110.6 and 40 CFR 117.21) or Section 102 of the Comprehensive Environmental Response, Compensation and Liability Act (CERCLA), 42 USC Section 9602. This permit does not relieve you of the reporting requirements of 40 CFR 110, 40 CFR 117, and 40 CFR 302 relating to spills or other releases of oil or hazardous substances.]

d. *Non-Stormwater Discharges*- You shall document that you have evaluated for the presence of non-stormwater discharges, except for those listed in Part I and Part IV.C.10, and that all unauthorized discharges have been eliminated. Documentation of your evaluation shall include:

i. The date of any evaluation;
ii. A description of the evaluation criteria used;
iii. A list of the outfalls or onsite drainage points that were directly observed during the evaluation;
iv. The different types of non-stormwater discharge(s) and source locations; and
v. The action(s) taken, such as a list of control measures used to eliminate unauthorized discharge(s), if any were identified. For example, a floor drain was sealed, a sink drain was re-routed to sanitary, or an NPDES permit application was submitted for an unauthorized cooling water discharge.

e. *Salt Storage*- You shall document the location of any storage piles containing salt used for deicing or other commercial or industrial purposes.

f. *Sampling Data*- A summary of existing discharge sampling data describing pollutants in stormwater discharges from the facility.

4. Description of Control Measures

You shall document the location and type of control measures you have installed and implemented at your site to achieve the control measures/best management practices (BMPs) in Part IV.C, and where applicable, in Part IV.K. You shall describe how you addressed the control measure selection and design considerations in Part IV.B. This documentation shall describe how the control measures at your site address both the pollutant sources identified in Part IV.J.2 and any stormwater run-on that commingles with any discharges covered under this permit.

5. Schedules and Procedures

a. *Pertaining to Control Measures used to Comply with the Control Measures/Best Management Practices (BMPs)*- The following shall be documented in your SWPPP:

i. *Good Housekeeping*(See Part IV.C.2) - A schedule for regular pickup and disposal of waste materials, along with routine inspections for leaks and conditions of drums, tanks and containers.

ii. *Maintenance*(See Part IV.C.3) - Preventative maintenance procedures, including regular inspections, testing, maintenance, and repair of all industrial equipment and systems, and control measures, to avoid situations that may result in leaks, spills, and other releases, and any back-up practices in place should a runoff event occur while a control measure is off-line;

iii. *Spill Prevention and Response Procedures*(See Part IV.C.4) - Procedures for preventing and responding to spills and leaks. You may reference the existence of other plans for Spill Prevention Control and Countermeasure (SPCC) developed for the facility under Section 311 of the CWA or BMP programs otherwise required by an NPDES permit for the facility, provided that you keep a copy of that other plan onsite (hard copy or electronic) and make it available for review consistent with Part IV.J.5; and

iv. *Employee Training* (See Part IV.C.9) - A schedule for all types of necessary training.

b. *Pertaining to Monitoring and Inspection*- Where applicable, you shall document in your SWPPP your procedures for conducting analytical stormwater monitoring. You shall document in your SWPPP your procedures for performing, as appropriate, the two types of inspections specified by this permit, including: 1) Routine facility inspections (See Part IV.E.1) and 2) Quarterly visual assessment of stormwater discharges (See Part IV.E.2).

For each type of monitoring, your SWPPP shall document:

i. Locations where samples are collected, including any determination that two or more outfalls are substantially identical;
ii. Parameters for sampling and the frequency of sampling for each parameter;
iii. Schedules for monitoring at your facility (see Part 6.1.6);
iv. Any numeric control values (benchmarks, effluent limitations guidelines, or other requirements) applicable to discharges from each outfall; and
v. Procedures (e.g., responsible staff, logistics, laboratory to be used, etc.) for gathering storm event data.

For each type of inspection performed, your SWPPP shall identify:

i. Person(s) or positions of person(s) responsible for inspection;
ii. Schedules for conducting inspections; and
iii. Specific items to be covered by the inspection, including schedules for specific outfalls.

You shall document the following in your SWPPP if you plan to use the substantially identical outfall exception for your quarterly visual assessment requirements in Part IV.E.2 or your benchmark monitoring requirements in Part V:

i. Location of each of the substantially identical outfalls;
ii. Description of the general industrial activities conducted in the drainage area of each outfall;
iii. Description of the control measures implemented in the drainage area of each outfall;
iv. Description of the exposed materials located in the drainage area of each outfall that are likely to be significant contributors of pollutants to stormwater discharges;
v. An estimate of the runoff coefficient of the drainage areas (low = under 40%; medium = 40 to 65%;

high = above 65%); and
vi. Why the outfalls are expected to discharge substantially identical effluents.

6. Documentation Requirements- You are required to keep inspection, monitoring, and certification records with your SWPPP that together keep your records complete and up-to-date, and demonstrate your full compliance with the conditions of this permit:

i. A copy of this permit (an electronic copy easily available to SWPPP personnel is also acceptable);

ii. Descriptions and dates of any incidences of significant spills, leaks, or other releases that resulted in discharges of pollutants to surface waters of the State, through stormwater or otherwise; the circumstances leading to the release and actions taken in response to the release; and measures taken to prevent the recurrence of such releases (see Part IV.C.4);

iii. Records of employee training, including date training received (see Part IV.C.9);

iv. Documentation of maintenance and repairs of control measures, including the date(s) of regular maintenance, date(s) of discovery of areas in need of repair/replacement, and for repairs, date(s) that the control measure(s) returned to full function, and the justification for any extended maintenance/repair schedules (see Part IV.C.3);

v. All inspection reports, including the Routine Facility Inspection Reports (see Part IV.E.1) and the Quarterly Visual Assessment Reports (see Part IV.E.2);

vi. Description of any deviations from the schedule for visual assessments and/or monitoring, and the reason for the deviations (e.g., adverse weather or it was impracticable to collect samples within the first 30 minutes and/or from a 72-hour (3 day) storm interval) (see Parts IV.E.2.a, Part V.B.4 & 7);

vii. Description of any corrective action taken at your site, including triggering event and dates when problems were discovered and modifications occurred;

viii. Documentation of any benchmark exceedances and how they were responded to, including either (1) corrective action taken, (2) a finding that the exceedance was due to natural background pollutant levels, or (3) a finding that no further pollutant reductions were technologically available and economically practicable and achievable in light of best industry practice consistent with Part V.B.7; and

ix. Documentation to support any determination that pollutants of concern are not expected to be present above natural background levels if you discharge directly to impaired waters, and that such pollutants were not detected in your discharge or were solely attributable to natural background sources (see Part V.B.7).

K. Sector T - Treatment Works

You shall comply with the following sector-specific requirements associated with your primary industrial activity and any co-located industrial activities, as defined in Part VI. The sector-specific requirements apply to those areas of your facility where those sector-specific activities occur. These sector-specific requirements are in addition to any requirements specified elsewhere in this permit.

1. Limitations on Coverage

Except for process discharges covered under Part I and other allowable discharges listed in Part IV.C.10,

the following stormwater discharges associated with industrial activity are not authorized by this permit:

a. *Prohibition of Non-Stormwater Discharges*- Sanitary and industrial wastewater and equipment and vehicle washwater are not authorized by this permit.

2. Additional Control Measures/Best Management Practices (BMPs)

a. *Control Measures* (See also Part IV.C) - In addition to the other control measures, consider the following: routing contaminated stormwater to the treatment works; or covering exposed materials (i.e., from the following areas: grit, screenings, and other solids handling, storage, or disposal areas; sludge drying beds; dried sludge piles; compost piles; and septage or hauled waste receiving station).

b. *Employee Training*(See also Part IV.C.9) - At a minimum, training shall address the following areas when applicable to a facility: petroleum product management; process chemical management; spill prevention and controls; fueling procedures; general good housekeeping practices; and proper procedures for using fertilizer, herbicides, and pesticides.

3.Additional SWPPP Requirements

a. *Drainage Area Site Map*(See also Part IV.J.2.) - Document in your SWPPP where any of the following may be exposed to precipitation or surface runoff: grit, screenings, and other solids handling, storage, or disposal areas; sludge drying beds; dried sludge piles; compost piles; septage or hauled waste receiving station; and storage areas for process chemicals, petroleum products, solvents, fertilizers, herbicides, and pesticides.

b. *Potential Pollutant Sources*(See also Part IV.J.3.) - Document in your SWPPP the following additional sources and activities that have potential pollutants associated with them, as applicable: grit, screenings, and other solids handling, storage, or disposal areas; sludge drying beds; dried sludge piles; compost piles; septage or hauled waste receiving station; and access roads and rail lines.

c. *Wastewater and Washwater Requirements*- Keep a copy of all your current NPDES permits issued for wastewater and industrial, vehicle and equipment washwater discharges or, if an NPDES permit has not yet been issued, a copy of the pending application(s) with your SWPPP. If the washwater is handled in another manner, the disposal method shall be described and all pertinent documentation shall be retained onsite.

4. Additional Inspection Requirements(See also Part IV.E.) - Include the following areas in all inspections: access roads and rail lines; grit, screenings, and other solids handling, storage, or disposal areas; sludge drying beds; dried sludge piles; compost piles; and septage or hauled waste receiving station.

PART V. MONITORING AND REPORTING REQUIREMENTS

A. Reporting Benchmark Monitoring Data to Ohio EPA

1. Reporting Benchmark Monitoring Data to Ohio EPA - Reserved

2. Annual Report- You shall complete an annual report using the Annual Reporting Form provided by Ohio EPA at the following location:
https://view.officeapps.live.com/op/view.aspx?src=https%3A%2F%2Fepa.ohio.gov%2Fstatic%2FPortals%2F35%2Fpermits%2FOHR000006%2FARForm.docx&wdOrigin=BROWSELINK

You are not required to submit your annual report to Ohio EPA unless specifically requested. The timeframe to complete the report is at the discretion of the permittee but the same schedule to complete shall be maintained throughout this permit term. You shall keep the completed annual reports with your SWPPP.

B. Stormwater Monitoring Requirements - Reserved

PART VI. DEFINITIONS AND ACRONYMS

Action Area- all areas to be affected directly or indirectly by the stormwater discharges, allowable non-stormwater discharges, and stormwater discharge-related activities, and not merely the immediate area involved in these discharges and activities.

Best Management Practices (BMPs)- schedules of activities, practices (and prohibitions of practices), structures, vegetation, maintenance procedures, and other management practices to prevent or reduce the discharge of pollutants to surface waters of the State. BMPs also include treatment requirements, operating procedures, and practices to control plant site runoff, spillage or leaks, sludge or waste disposal, or drainage from raw material storage. See 40 CFR 122.2.

Co-located Industrial Activities- Any industrial activities, excluding your primary industrial activity(ies), located on-site that are defined by the stormwater regulations at 122.26(b)(14)(i)-(ix) and (xi). An activity at a facility is not considered co-located if the activity, when considered separately, does not meet the description of a category of industrial activity covered by the stormwater regulations or identified by the SIC code list in in the Industrial Multi-Sector General Permit OHR000007, Appendix D.

Control Measure- refers to any BMP or other method (including effluent limitations) used to prevent or reduce the discharge of pollutants to surface waters of the State.

Director - the Director of the Ohio Environmental Protection Agency (Ohio EPA).

Discharge- when used without qualification, means the "discharge of a pollutant." See 40 CFR 122.2.

Discharge of a pollutant- any addition of any "pollutant" or combination of pollutants to "surface waters of the State" from any "point source", or any addition of any pollutant or combination of pollutants to the waters of the "contiguous zone" or the ocean from any point source other than a vessel or other floating craft which is being used as a means of transportation. This includes additions of pollutants into surface waters of the State from: surface runoff which is collected or channeled by man; discharges through pipes, sewers, or other conveyances, leading into privately owned treatment works. See 40 CFR 122.2.

Discharge-related activities- activities that cause, contribute to, or result in stormwater and allowable non-stormwater point source discharges, and measures such as the siting, construction and operation of BMPs to control, reduce, or prevent pollution in the discharges.

Drought-stricken area- a period of below average water content in streams, reservoirs, ground-water aquifers, lakes and soils.

U.S. EPA Approved or Established Total Maximum Daily Loads (TMDLs)- "U.S. EPA Approved TMDLs" are those that are developed by a State and approved by U.S. EPA. "U.S. EPA Established TMDLs" are those that are developed by U.S. EPA.

Existing Discharger- an operator applying for coverage under this permit for discharges authorized previously under an NPDES general or individual permit.

Facility or Activity- any NPDES "point source" (including land or appurtenances thereto) that is subject to regulation under the NPDES program. See 40 CFR 122.2.

Federal Facility- any buildings, installations, structures, land, public works, equipment, aircraft, vessels, and other vehicles and property, owned by, or constructed or manufactured for the purpose of leasing to, the federal government.

Illicit Discharge- is defined at 40 CFR 122.26(b)(2) and refers to any discharge to a municipal separate storm sewer that is not entirely composed of stormwater, except discharges authorized under an NPDES permit (other than the NPDES permit for discharges from the MS4) and discharges resulting from fire fighting activities.

Impaired Water (or "Water Quality Impaired Water" or "Water Quality Limited Segment") - A water is impaired for purposes of this permit if it has been identified by a State or U.S. EPA pursuant to Section 303(d) of the Clean Water Act as not meeting applicable State water quality standards (these waters are called "water quality limited segments" under 40 CFR 30.2(j)). Impaired waters include both waters with approved or established TMDLs, and those for which a TMDL has not yet been approved or established.

Industrial Activity- the 10 categories of industrial activities included in the definition of "stormwater discharges associated with industrial activity" as defined in 40 CFR 122.26(b)(14)(i)-(ix) and (xi).

Industrial Stormwater- stormwater runoff from industrial activity.

Municipal Separate Storm Sewer- a conveyance or system of conveyances (including roads with drainage systems, municipal streets, catch basins, curbs, gutters, ditches, man-made channels, or storm drains):

(i) Owned or operated by a State, city, town, borough, county, parish, district, association, or other public body (created by or pursuant to State law) having jurisdiction over disposal of sewage, industrial wastes, stormwater, or other wastes, including special districts under State law such as a sewer district, flood control district or drainage district, or similar entity, or a designated and approved management agency under section 208 of the CWA that discharges to surface waters of the State;
(ii) Designed or used for collecting or conveying stormwater;
(iii) Which is not a combined sewer; and
(iv) Which is not part of a Publicly Owned Treatment Works (POTW) as defined at 40 CFR 122.2. See 40 CFR 122.26(b)(4) and (b)(7).

New Discharger- a facility from which there is a discharge, that did not commence the discharge at a particular site prior to August 13, 1979, which is not a new source, and which has never received a finally effective NPDES permit for discharges at that site. See 40 CFR 122.2.

New Source- any building, structure, facility, or installation from which there is or may be a "discharge of pollutants", the construction of which commenced:

- after promulgation of standards of performance under section 306 of the CWA which are applicable to such source, or
- after proposal of standards of performance in accordance with section 306 of the CWA which are applicable to such source, but only if the standards are promulgated in accordance with section 306 within 120 days of their proposal. See 40 CFR 122.2.

New Source Performance Standards (NSPS)- technology-based standards for facilities that qualify as new sources under 40 CFR 122.2 and 40 CFR 122.29.

No exposure- all industrial materials or activities are protected by a storm-resistant shelter to prevent exposure to rain, snow, snowmelt, and/or runoff. See 40 CFR 122.26(g).

Ohio EPA- the Ohio Environmental Protection Agency.

Operator- any entity with a stormwater discharge associated with industrial activity that meets either of the following two criteria:

(i) The entity has operational control over industrial activities, including the ability to modify those activities; or
(ii) The entity has day-to-day operational control of activities at a facility necessary to ensure compliance with the permit (e.g., the entity is authorized to direct workers at a facility to carry out activities required by the permit).

Person- an individual, association, partnership, corporation, municipality, State or Federal agency, or an agent or employee thereof. See 40 CFR 122.2.

Point source- any discernible, confined, and discrete conveyance, including but not limited to any pipe, ditch, channel, tunnel, conduit, well, discrete fissure, container, rolling stock, concentrated animal feeding operation, landfill leachate collection system, vessel, or other floating craft from which pollutants are or may be discharged. This term does not include return flows from irrigated agriculture or agricultural stormwater runoff. See 40 CFR 122.2.

Pollutant- dredged spoil, solid waste, incinerator residue, filter backwash, sewage, garbage, sewage sludge, munitions, chemical wastes, biological materials, heat, wrecked or discarded equipment, rock, sand, cellar dirt, and industrial, municipal and agricultural waste discharged into water. See 40 CFR 122.2.

Pollutant of concern- A pollutant which causes or contributes to a violation of a water quality standard, including a pollutant which is identified as causing an impairment in a state's 303(d) list.

Primary industrial activity- includes any activities performed on-site which are (1) identified by the facility's primary SIC code; or (2) included in the narrative descriptions of 122.26(b)(14)(i), (iv), (v), or (vii), and (ix). [For co-located activities covered by multiple SIC codes, it is recommended that the primary industrial determination be based on the value of receipts or revenues or, if such information is not available for a particular facility, the number of employees or production rate for each process may be compared. The operation that generates the most revenue or employs the most personnel is the operation in which the facility is primarily engaged. In situations where the vast majority of on-site activity falls within one SIC code, that activity may be the primary industrial activity.] Narrative descriptions in 40 CFR 122.26(b)(14) identified above include: (i) activities subject to stormwater effluent limitations guidelines, new source performance standards, or toxic pollutant effluent standards; (iv) hazardous waste treatment storage, or disposal facilities including those that are operating under interim status or a permit under subtitle C of the Resource Conservation and Recovery Act (RCRA); (v) landfills, land application sites and open dumps that receive or have received industrial wastes; (vii) steam electric power generating facilities; and (ix) sewage treatment works with a design flow of 1.0 mgd or more.

Qualified Personnel- Qualified personnel are those who possess the knowledge and skills to assess conditions and activities that could impact stormwater quality at your facility, and who can also evaluate the effectiveness of control measures.

Reportable Quantity Release- a release of a hazardous substance at or above the established legal threshold that requires emergency notification. Refer to 40 CFR Parts 110, 117, and 302 for complete definitions and reportable quantities for which notification is required.

Runoff coefficient - the fraction of total rainfall that will appear at the conveyance as runoff. See 40 CFR 122.26(b)(11).

Run-On- sources of stormwater that drain from land located upslope or upstream from the regulated facility in question.

Semi-Arid Climate- areas where annual rainfall averages from 10 to 20 inches.

Significant materials- includes, but is not limited to: raw materials; fuels; materials such as solvents, detergents, and plastic pellets; finished materials such as metallic products; raw materials used in food processing or production; hazardous substances designated under section 101(14) of CERCLA; any chemical the facility is required to report pursuant to section 313 of Title III of SARA; fertilizers; pesticides; and waste products such as ashes, slag and sludge that have the potential to be released with stormwater discharges. See 40 CFR 122.26(b)(12).

Special Aquatic Sites- sites identified in 40 CFR 230 Subpart E. These are geographic areas, large or small, possessing special ecological characteristics of productivity, habitat, wildlife protection, or other important and easily disrupted ecological values. These areas are generally recognized as significantly influencing or positively contributing to the general overall environmental health or vitality of the entire ecosystem of a region.

Stormwater- stormwater runoff, snow melt runoff, and surface runoff and drainage. See 40 CFR 122.26(b)(13).

Stormwater Discharges Associated with Construction Activity- a discharge of pollutants in stormwater runoff from areas where soil disturbing activities (e.g., clearing, grading, or excavating), construction materials, or equipment storage or maintenance (e.g., fill piles, borrow areas, concrete truck washout, fueling), or other industrial stormwater directly related to the construction process (e.g., concrete or asphalt batch plants) are located. See 40 CFR 122.26(b)(14)(x) and 40 CFR 122.26(b)(15).

Stormwater Discharges Associated with Industrial Activity- the discharge from any conveyance that is used for collecting and conveying stormwater and that is directly related to manufacturing, processing or raw materials storage areas at an industrial plant. The term does not include discharges from facilities or activities excluded from the NPDES program under Part 122. For the categories of industries identified in this section, the term includes, but is not limited to, stormwater discharges from industrial plant yards; immediate access roads and rail lines used or traveled by carriers of raw materials, manufactured products, waste material, or by-products used or created by the facility; material handling sites; refuse sites; sites used for the application or disposal of process waste waters (as defined at part 401 of this chapter); sites used for the storage and maintenance of material handling equipment; sites used for residual treatment, storage, or disposal; shipping and receiving areas; manufacturing buildings; storage areas (including tank farms) for raw materials, and intermediate and final products; and areas where industrial activity has taken place in the past and significant materials remain and are exposed to stormwater. For the purposes of this paragraph, material handling activities include storage, loading and unloading, transportation, or conveyance of any raw material, intermediate product, final product, by-product or waste product. The term excludes areas located on plant lands separate from the plant's industrial activities, such as office buildings and accompanying parking lots as long as the drainage from the excluded areas is not mixed with stormwater drained from the above described areas. Industrial facilities include those that are federally, State, or municipally owned or operated that meet the description of the facilities listed in 40 CFR 122.26(b)(14).
Surface Waters of the State - Means all streams, lakes, ponds, marshes, watercourses, waterways, springs, irrigation systems, drainage systems, and all other bodies or accumulations of surface water, natural or

artificial, which are situated wholly or partly within, or border upon, this state, or are within its jurisdiction, except those private waters which do not combine or effect a junction with natural surface waters.

Total Maximum Daily Loads (TMDLs)- A TMDL is a calculation of the maximum amount of a pollutant that a waterbody can receive and still meet water quality standards, and an allocation of that amount to the pollutant's sources. A TMDL includes wasteload allocations (WLAs) for point source discharges; load allocations (LAs) for nonpoint sources and/or natural background, and shall include a margin of safety (MOS) and account for seasonal variations. (See section 303(d) of the Clean Water Act and 40 CFR 130.2 and 130.7).

Water Quality Impaired- See "Impaired Water".

Water Quality Standards- A water quality standard defines the water quality goals of a water body, or portion thereof, by designating the use or uses to be made of the water and by setting criteria necessary to protect the uses. States and U.S. EPA adopt water quality standards to protect public health or welfare, enhance the quality of water and serve the purposes of the Clean Water Act (See CWA sections 101(a)2 and 303(c)). Water quality standards also include an antidegradation policy. See P.U.D. o. 1 of Jefferson County et al v. Wash Dept of Ecology et al, 511 US 701, 705 (1994).

"You" and "Your" - as used in this permit are intended to refer to the permittee, the operator, or the discharger as the context indicates and that party's facility or responsibilities. The use of "you" and "your" refers to a particular facility and not to all facilities operated by a particular entity. For example, "you shall submit" means the permittee shall submit something for that particular facility. Likewise, "all your discharges" would refer only to discharges at that one facility.

ABBREVIATIONS AND ACRONYMS

BAT - Best Available Technology Economically Achievable

BOD5 – Biochemical Oxygen Demand (5-day test)

BMP - Best Management Practice

BPJ - Best Professional Judgment

BPT - Best Practicable Control Technology Currently Available

CERCLA - Comprehensive Environmental Response, Compensation and Liability Act

CGP - Construction General Permit

COD - Chemical Oxygen Demand

CWA - Clean Water Act (or the Federal Water Pollution Control Act, 33 U.S.C. §1251 et seq)

CWT - Centralized Waste Treatment

DMR - Discharge Monitoring Report

U.S. EPA - U. S. Environmental Protection Agency

FWS - U. S. Fish and Wildlife Service

LA - Load Allocations

MDMR - MSGP Discharge Monitoring Report

MGD - Million Gallons per Day

MOS - Margin of Safety

MS4 - Municipal Separate Storm Sewer System

MSDS - Material Safety Data Sheet

MSGP - Multi-Sector General Permit

NAICS - North American Industry Classification System

NMFS - U. S. National Marine Fisheries Service

NOI - Notice of Intent

NOT - Notice of Termination

NPDES - National Pollutant Discharge Elimination System

NRC - National Response Center

NTU - Nephelometric Turbidity Unit

OMB - U. S. Office of Management and Budget

ORW - Outstanding Resource Water

OSM - U. S. Office of Surface Mining

POTW - Publicly Owned Treatment Works

RCRA - Resource Conservation and Recovery Act

RQ - Reportable Quantity

SARA - Superfund Amendments and Reauthorization Act

SIC - Standard Industrial Classification

SMCRA - Surface Mining Control and Reclamation Act

SPCC - Spill Prevention, Control, and Countermeasures

SWPPP - Stormwater Pollution Prevention Plan

TMDL - Total Maximum Daily Load

TSDF - Treatment, Storage, or Disposal Facility

TSS - Total Suspended Solids

USGS - United States Geological Survey

WLA - Wasteload Allocation

WQS - Water Quality Standard

National Pollutant Discharge Elimination System (NPDES) Permit Program

F A C T S H E E T

Regarding an NPDES Permit to Discharge to Waters of the State of Ohio
for the **Olentangy Environmental Control Center (OECC)**

Public Notice No.: 195230
Public Notice Date: February 5, 2024
Comment Period Ends: March 6, 2024

OEPA Permit No.: **4PK00001*ND**
Application No.: **OH0054399**

Name and Address of Applicant:
Delaware County Board of Commissioners
Delaware County Courthouse
91 North Sandusky Street
Delaware, Ohio 43015

Name and Address of Facility Where Discharge Occurs:
Olentangy Environmental Control Center
10333 Olentangy River Road
Powell, OH 43065
Delaware County

Receiving Water: **Olentangy River**

Subsequent Stream Network: **Scioto River to Ohio River**

Introduction

Development of a Fact Sheet for NPDES permits is mandated by Title 40 of the Code of Federal Regulations (CFR), Section 124.8 and 124.56. This document fulfills the requirements established in those regulations by providing the information necessary to inform the public of actions proposed by the Ohio Environmental Protection Agency (Ohio EPA), as well as the methods by which the public can participate in the process of finalizing those actions.

This Fact Sheet is prepared in order to document the technical basis and risk management decisions that are considered in the determination of water quality based NPDES Permit effluent limitations. The technical basis for the Fact Sheet may consist of evaluations of promulgated effluent guidelines, existing effluent quality, instream biological, chemical and physical conditions, and the relative risk of alternative effluent limitations. This Fact Sheet details the discretionary decision-making process empowered to the Director by the Clean Water Act (CWA) and Ohio Water Pollution Control Law (Ohio Revised Code [ORC] 6111). Decisions to award variances to Water Quality Standards (WQS) or promulgated effluent guidelines for economic or technological reasons will also be justified in the Fact Sheet where necessary.

Antidegradation provisions in Ohio Administrative Code (OAC) Chapter 3745-1 describe the conditions under which water quality may be lowered in surface waters. An antidegradation review was necessary in this case, and in accordance with the antidegradation rule, OAC 3745-1-05, it was determined that a lowering of water quality in Olentangy River is necessary.

Effluent limits based on available treatment technologies are required by Section 301(b) of the CWA. Many of these have already been established by the United States Environmental Protection Agency (U.S. EPA) in the effluent guideline regulations (a.k.a. categorical regulations) for industry categories in 40 CFR Parts 405-499. Technology-based regulations for publicly-owned treatment works are listed in the Secondary Treatment Regulations (40 CFR Part 133). If regulations have not been established for a category of dischargers, the director may establish technology-based limits based on best professional judgment (BPJ).

Ohio EPA reviews the need for water-quality-based limits on a pollutant-by-pollutant basis. Wasteload allocations (WLAs) are used to develop these limits based on the pollutants that have been detected in the discharge, and the receiving water's assimilative capacity. The assimilative capacity depends on the flow in the water receiving the discharge, and the concentration of the pollutant upstream. The greater the upstream flow, and the lower the upstream concentration, the greater the assimilative capacity is. Assimilative capacity may represent dilution (as in allocations for metals), or it may also incorporate the break-down of pollutants in the receiving water (as in allocations for oxygen-demanding materials).

The need for water-quality-based limits is determined by comparing the WLA for a pollutant to a measure of the effluent quality. The measure of effluent quality is called Projected Effluent Quality (PEQ). This is a statistical measure of the average and maximum effluent values for a pollutant. As with any statistical method, the more data that exists for a given pollutant, the more likely that PEQ will match the actual observed data. If there is a small data set for a given pollutant, the highest measured value is multiplied by a statistical factor to obtain a PEQ; for example if only one sample exists, the factor is 6.2, for two samples - 3.8, for three samples - 3.0. The factors continue to decline as samples sizes increase. These factors are intended to account for effluent variability, but if the pollutant concentrations are fairly constant, these factors may make PEQ appear larger than it would be shown to be if more sample results existed.

Procedures for Participation in the Formulation of Final Determinations

The proposed modification is tentative but shall become final on the effective date unless (1) an adjudication hearing is requested, (2) the Director withdraws and revises the proposed modification after consideration of the record of a public meeting or written comments, or (3) upon disapproval by the Administrator of the U.S. Environmental Protection Agency.

Within thirty (30) days of publication of this notice, any person may submit written comments, a statement as to why the proposed modification should be changed, a request for a public meeting on the proposed modification and/or a request for notice of further actions concerning the modification. All communications timely received will be considered in the final formulation of the modification. If significant public interest is shown a public meeting will be held prior to finalization of the modification.

Within thirty (30) days of the issuance of the proposed modification any officer of an agency of the state or of a political subdivision, acting in his representative capacity or any person aggrieved or adversely affected by issuance of it may request an adjudication hearing by submitting a written objection in accordance with Ohio Revised Code Section 3745.07. Since all other conditions of the permit remain in effect, a hearing may not be requested on any issues other than the proposed modification. If an adjudication hearing is requested, the existing NPDES permit will remain in effect until the hearing is resolved. Following the finalization of the modification by the Director, any person who was a party to an adjudication hearing may appeal to the Environmental Review Appeals Commission.

Requests for public meetings shall be in writing and shall state the action of the Director objected to, the questions to be considered, and the reasons the action is contested. Such requests should be emailed to HClerk@epa.ohio.gov or mailed to:

Legal Records Section
Ohio Environmental Protection Agency
P.O. Box 1049
Columbus, Ohio 43216-1049

Interested persons are invited to submit written comments upon the discharge permit. Comments should be submitted by email to epa.dswcomments@epa.ohio.gov (preferred method) or delivered in person or by mail no later than 30 days after the date of this Public Notice. Deliver or mail all comments to:

Ohio Environmental Protection Agency
Attention: Division of Surface Water
Permits Processing Unit
P.O. Box 1049
Columbus, Ohio 43216-1049

The Ohio EPA permit number and Public Notice numbers should appear on each page of any submitted comments. All comments received no later than 30 days after the date of the Public Notice will be considered.

Citizens may conduct file reviews regarding specific companies or sites. Appointments are necessary to conduct file reviews, because requests to review files have increased dramatically

in recent years. The first 250 pages copied are free. For requests to copy more than 250 pages, there is a five-cent charge for each page copied. Payment is required by check or money order, made payable to Treasurer State of Ohio.

For additional information about this fact sheet or the draft permit, contact John Owen at (614) 728-3849 or at John.Owen@epa.ohio.gov.

Location of Discharge/Receiving Water Use Classification

The Olentangy Environmental Control Center (OECC) discharges to the Olentangy River at River Mile 13.4 in Delaware County. Figure 1 shows the approximate location of the facility.

This segment is further identified by Ohio EPA River Code: 02-400 and U.S. EPA River Reach Code: 05060001-11-02, County: Delaware. This section of the Olentangy River is in the Eastern Corn Belt Plains Ecoregion. The following designated uses under Ohio's WQS (OAC 3745-1-09) are applicable to this section of the Olentangy River: Exceptional Warmwater Habitat (EWH), Agricultural Water Supply (AWS), Industrial Water Supply (IWS), and primary contact recreation (PCR).

Use designations define the goals and expectations of a waterbody. These goals are set for aquatic life protection, recreation use and water supply use, and are defined in the Ohio WQS (OAC 3745-1-07). The use designations for individual waterbodies are listed in rules -08 through -32 of the Ohio WQS. Once the goals are set, numeric WQS are developed to protect these uses. Different uses have different water quality criteria.

Use designations for aquatic life protection include habitats for coldwater fish and macroinvertebrates, warmwater aquatic life and waters with exceptional communities of warmwater organisms. These uses all meet the goals of the federal CWA. Ohio WQS also include aquatic life use designations for waterbodies which cannot meet the CWA goals because of human-caused conditions that cannot be remedied without causing fundamental changes to land use and widespread economic impact. The dredging and clearing of some small streams to support agricultural or urban drainage is the most common of these conditions. These streams are given Modified Warmwater or Limited Resource Water designations.

Recreation uses are defined by the depth of the waterbody and the potential for wading or swimming. Uses are defined for bathing waters, swimming/canoeing (Primary Contact Recreation) and wading only (Secondary Contact which are generally waters too shallow for swimming or canoeing).

Water supply uses are defined by the actual or potential use of the waterbody. Public Water Supply designations apply near existing water intakes so that waters are safe to drink with

standard treatment. Most other waters are designated for agricultural water supply and industrial water supply.

FACILITY DESCRIPTION

The OECC is an advanced treatment facility with an average design flow of 6.0 million gallons per day (MGD). The treatment plant was originally constructed in 1980, with the most recent major upgrade occurring in 2009. The treatment plant serves the City of Powell, portions of Dublin, and Liberty, Orange, Berlin, and Concord Townships in Delaware County. The current treatment plant processes and/or equipment include:

- Influent pumping;
- Bar screen;
- Comminution;
- Primary sedimentation;
- Activated sludge – conventional;
- Combined biological nitrification and BOD removal;
- Biological denitrification;
- Secondary clarification with ferric chloride addition;
- Mixed media filter;
- Ultraviolet disinfection; and
- Post-aeration.

On October 11, 2022, Permit to Install (PTI) No.: 1481990 was issued to Delaware County for the OECC Headworks and Aeration Upgrades project, for which construction is currently underway. The project was to make improvements to the Olentangy Environmental Control Center utilizing a Design-Build delivery method. The general improvements plan includes upsizing and renovation of the existing influent pump station, construction of a new influent screenings facility, replacement of the biological treatment equipment and conversion to 4/5-Stage Bardenpho biological nutrient removal process during dry weather for influent flows less than 13 to 18.5 MGD (depending on influent loadings. For wet weather influenced flows, improvements to the plant will allow for the transition into a contact stabilization-based mode of operation to retain mixed liquor within the treatment system. The wet weather "mode" will increase the process capacity to approximately 26 MGD of influent flow. Additionally, the project will allow for the conversion of the existing tertiary sand filters to cloth disk filters, and provide upgrades to the solids thickening, storage, and dewatering facilities. Once the final improvements have been completed, a closing PTI application will be submitted that will outline what final improvements were installed.

Currently OECC has a manual bypass that can re-route all or a portion of flow around both the tertiary filters and disinfection. In this alignment, all plant flow is bypassed around tertiary and disinfection treatments before flowing through post aeration and the sampling and monitoring stations, ultimately discharging via 001.

This bypass may only be used during filter and UV maintenance November through April, after notice is given to Ohio EPA and Ohio EPA has agreed to the bypass. This diversion is allowed, granted that effluent limits are met, that sampling for total suspended solids, ammonia-N, total phosphorus, E. coli and 5-day CBOD is done at Outfall 001 during the diversion and reported in eDMR. Bypassing disinfection is prohibited May through October, and if it occurs Delaware County Regional Sewer District shall follow the guidelines set forth in Part III 11.B. and III 12.B. of the permit. During bypass events, sampling shall be reported at station 602 as described in Part I of the permit.

Additionally, OECC automatically diverts a portion of flow around tertiary filters at set flow rates. Diverted flow is then combined with filtered flow, disinfected (May through October), and discharged to the Olentangy River through Outfall 001. The filter diversion is allowed to ensure efficient operation as long as effluent limits are met and that sampling at Outfall 001 for total suspended solids, ammonia-N, total phosphorus, E. coli, and 5-day CBOD is done and reported on the eDMR.

During bypass events, sampling is reported at station 602. A special condition is included in Part II and part III of the permit to describe bypass conditions.

OECC has an approved pretreatment program. OECC has two categorical users that discharge 0.070 MGD of flow.

For potable water, the OECC service area uses both surface water from the Olentangy River (Delco Water Company) and groundwater from private wells.

OECC has 100% separated sewers in the collection system which include 10 lift stations.

OECC currently utilizes the following sewage sludge treatment processes (Figure 3):

- Gravity Thickening
- Polymer, Lime, ferric-chloride, alum addition
- Mechanical Dewatering via centrifuge
- Landfilling
- Hauling to another facility for treatment

However, as discussed above, improvement to the sludge management are currently underway and will included improvements to the solids thickening, storage, and dewatering facilities.

Basis of the Modification

Total Inorganic Nitrogen

In the most recent NPDES renewal permit (version *MD), final effluent limits (concentrations and loadings) were included for total inorganic nitrogen (TIN) (STORET parameter code 00640) to replace the final effluent limitations for nitrate + nitrate (STORET parameter code 00630) from the *LD permit version at the request of Delaware County. The nitrate + nitrite final effluent limitations were originally based on existing effluent quality from the OECC discharge during the late 1990's and were not correlated to any denitrification design standards or WQ criteria. Compliance with both seasonal ammonia-nitrogen (STORET 00610) and the nitrate + nitrate limitations proved challenging.

The Delaware County Regional Sewer District (DCRSD) (permittee) submitted an NPDES permit modification request on August 7, 2023. The permittee requested that the seasonal TIN concentration limits of 5.36 mg/L in the summer and 5.86 mg/L winter, and associated loadings, be revised to a single monthly average concentration of 10 mg/l, with the corresponding loading limitation based on an average daily design flow of 6.0 MGD, which is 227.1 kg/day. Ohio EPA evaluated the request and supporting documentation submitted by the permittee, and found the results demonstrate that a limit of 10 mg/L for this parameter will not violate water quality standards. The proposed modification would revise the seasonal TIN effluent limits to a monthly average concentration value of 10 mg/L, with a corresponding loading limit at 227.1 kg/day, at station 001.

Figure 1. Location of the Olentangy Environmental Control Center

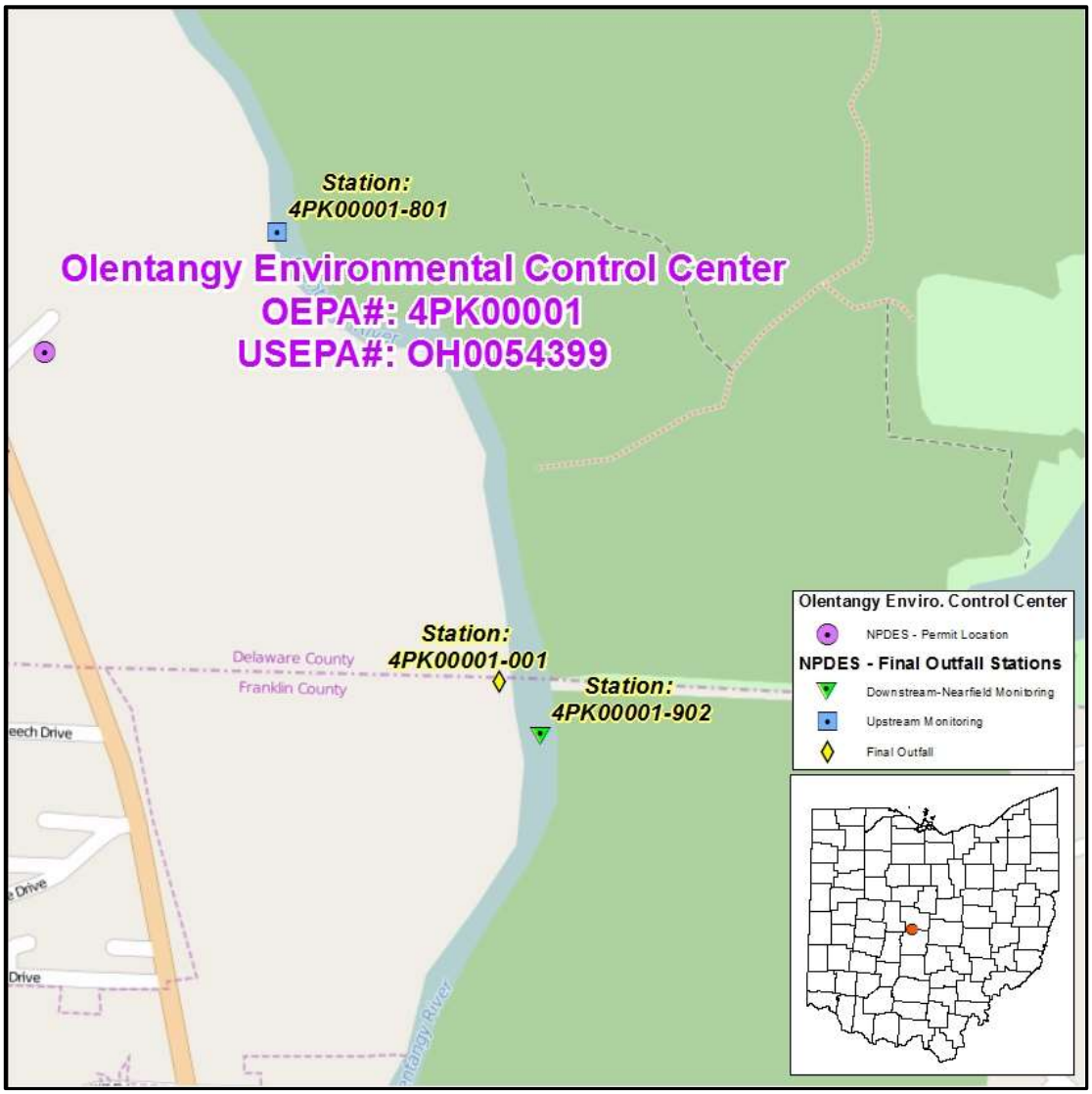

Figure 2. Current OECC Wastewater Treatment System

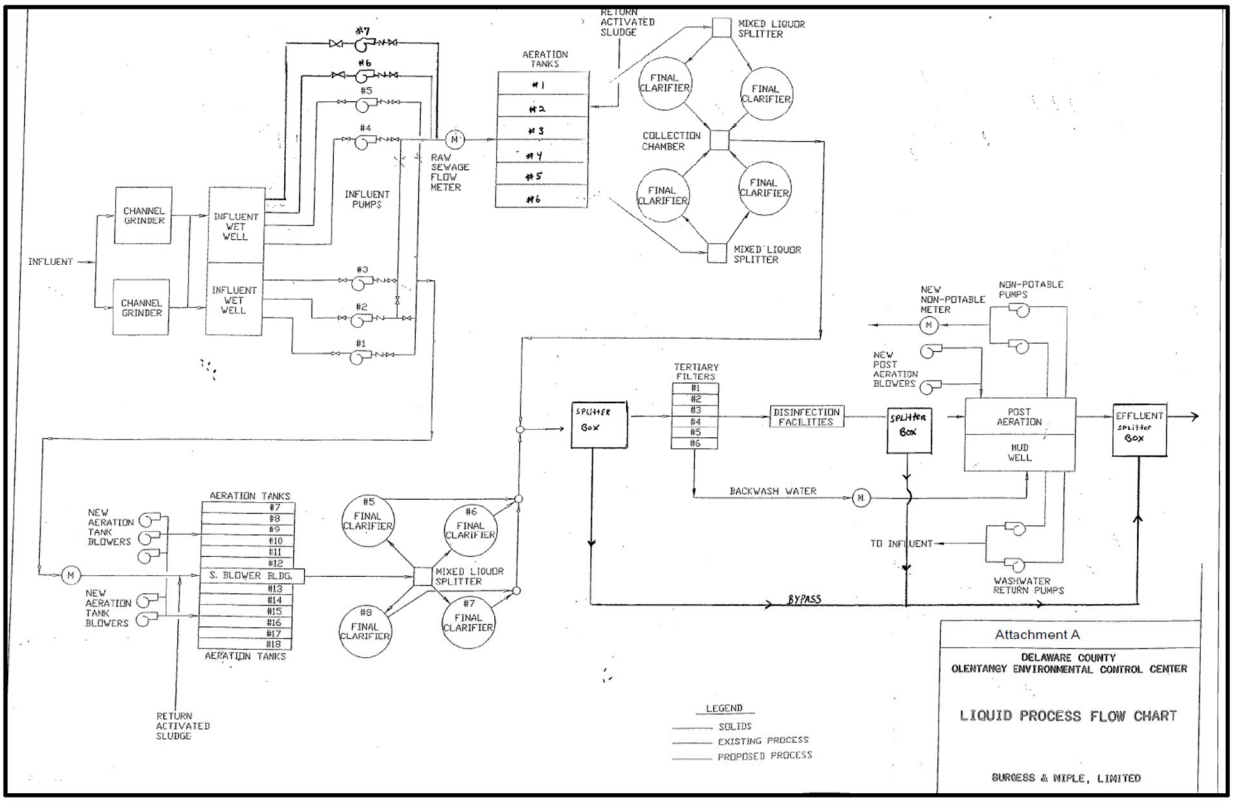
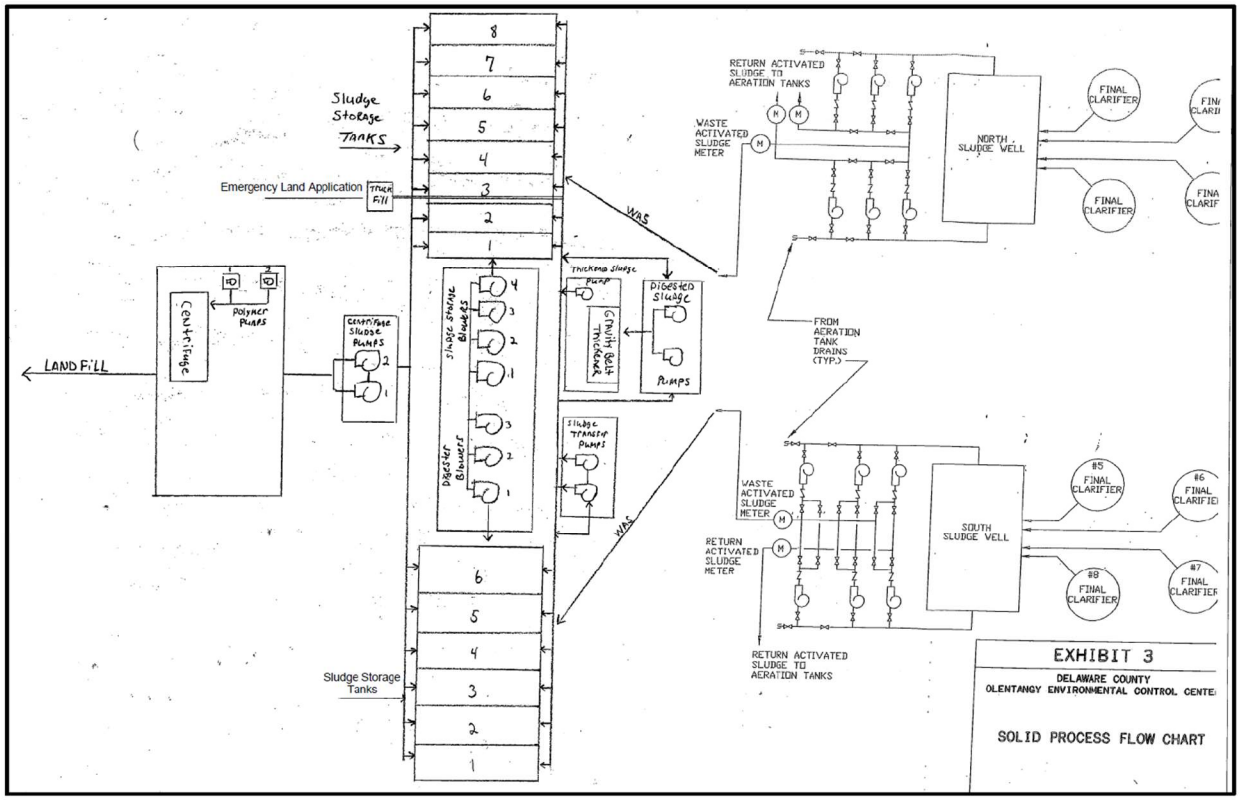
Figure 3. Current OECC Solids Treatment Path